ResearchGate

See discussions, stats, and author profiles for this publication at: https://www.researchgate.net/publication/277247883

Invariant Manifolds

Book · January 1977

DOI: 10.1007/BFb0092042

CITATIONS
1,210

READS
2,298

3 authors, including:

Morris Hirsch
University of Wisconsin–Madison
254 PUBLICATIONS **17,183** CITATIONS

SEE PROFILE

Michael Shub
City College of New York
223 PUBLICATIONS **13,172** CITATIONS

SEE PROFILE

All content following this page was uploaded by Morris Hirsch on 17 August 2015.

The user has requested enhancement of the downloaded file.

Lecture Notes in Mathematics

Edited by A. Dold and B. Eckmann

583

M. W. Hirsch
C. C. Pugh
M. Shub

Invariant Manifolds

Springer-Verlag
Berlin · Heidelberg · New York

Authors
Morris W. Hirsch
Charles C. Pugh
Department of Mathematics,
University of California
Berkeley, CA 94720/USA

Michael Shub
Department of Mathematics,
Queens College
City University of New York
Flushing, NY 11367/USA

Library of Congress Cataloging in Publication Data

Hirsch, Morris W 1933-
Invariant manifolds.

(Lecture notes in mathematics ; 583)
Bibliography: p.
Includes index.
1. Riemannian manifolds. 2. Invariants. 3. Submanifolds. 4. Foliations (Mathematics) I. Pugh, Charles C., 1940- joint author. II. Shub, Michael, 1942- joint author. III. Title. IV. Series: Lecture notes in mathematics (Berlin) ; 583.
QA3.L28 no. 583 [QA649] 510'.8s [514'.7] 77-5464

AMS Subject Classifications (1970): 34C30, 34C40, 34C35, 58F10, 58F15, 57D30, 57D50, 57E20

ISBN 3-540-08148-8 Springer-Verlag Berlin · Heidelberg · New York
ISBN 0-387-08148-8 Springer-Verlag New York · Heidelberg · Berlin

This work is subject to copyright. All rights are reserved, whether the whole or part of the material is concerned, specifically those of translation, reprinting, re-use of illustrations, broadcasting, reproduction by photocopying machine or similar means, and storage in data banks.

Under § 54 of the German Copyright Law where copies are made for other than private use, a fee is payable to the publisher, the amount of the fee to be determined by agreement with the publisher.

© by Springer-Verlag Berlin · Heidelberg 1977

Printed in Germany
Printing and binding: Beltz Offsetdruck, Hemsbach/Bergstr. 2141/3140-543210

Table of Contents

§1. Introduction 2

§2. The Linear Theory of Normal Hyperbolicity 7

§3. The C^r Section Theorem and Lipschitz Jets 27

§4. The Local Theory of Normally Hyperbolic Invariant Compact Manifolds 42

§5. Pseudo Hyperbolicity and Plaque Families 56

§5A. Center Manifolds 67

§6. Noncompactness and Uniformity 70

§6A. Forced Smoothness of $i: V \to M$ 111

§6B. Branched Laminations 113

§7. Normally Hyperbolic Foliations and Laminations 117

§7A. Local Product Structure and Local Stability 135

§8. Equivariant Fibrations and Nonwandering Sets 139

Bibliography 148

INVARIANT MANIFOLDS

M. Hirsch[1], C. Pugh[2], M. Shub[3]

§1. Introduction. Let V be a smooth compact submanifold of a smooth Riemann manifold M. Let f be a diffeomorphism of M leaving V invariant

$$f(V) = V .$$

We say that f is normally hyperbolic at V iff the tangent bundle of M, restricted to V, splits into three continuous subbundles

$$T_V M = N^u \oplus TV \oplus N^s$$

invariant by the tangent of f, Tf, such that

(a) Tf expands N^u more sharply than TV

(b) Tf contracts N^s more sharply than TV.

This says that the normal (to V) behavior of Tf is hyperbolic and dominates the tangent behavior.

A more powerful hypothesis is

(a') Tf expands N^u more sharply than Tf^r expands TV

(b') Tf contracts N^s more sharply than Tf^r contracts TV.

Here r is a nonnegative integer. This condition is r-*normal hyperbolicity* of f at V. Precise formulations will be given later in §1.

Now we state the

(1.1) *FUNDAMENTAL THEOREM OF NORMALLY HYPERBOLIC INVARIANT MANIFOLDS. Let* f *be* r-*normally hyperbolic at* V. *Through* V *pass stable and unstable manifolds invariant by* f *and tangent at* V *to* $TV \oplus N^s$, $N^u \oplus TV$. *They are of class* C^r. *The stable manifold is invariantly fibered by* C^r *submanifolds tangent at* V *to the subspaces* N^s. *Similarly, for the unstable manifold and* N^u. *These structures are*

[1]Partially supported by National Science Foundation Grant GP-29073.

[2]Partially supported by National Science Foundation Grant GP-14519.

[3]Partially supported by National Science Foundation Grant GP-36522 and the Sloan Foundation.

unique, and permanent under small perturbations of f. *Similar results hold for flows.*

See §2 and Theorem 4.1 for more details and the proof.

The converse of the persistence part of the theorem has recently been proved by R. Mañé in his thesis at IMPA [32]. Mañé also analyzes the definition of normal hyperbolicity going beyond the Birkoff center. See our (2.17). A. Gottlieb in his thesis at Brandeis University has also investigated necessary conditions for the persistence of invariant manifolds [15].

(1.1) has been proved many times. Where V = one point, it is the stable manifold theorem [22]. For the general compact V, Sacker proved it in [47]; his methods involve partial differential equations. Previous work was done by J. Hadamard [16], O. Perron [37,38,39], N. Bogoliubov and Y. Mitropolsky [8,9], J. Hale [17,18], S. Diliberto [13], and W. Kyner [30]. In [14] Neil Fenichel has independently proved many of the results of §§2,3,4 of this paper; his methods are similar to ours.

Anosov remarks in [3, p.23]:

> "Every five years or so, if not more often, someone 'discovers' the theorem of Hadamard and Perron, proving it by Hadamard's method of proof or by Perron's."

In this paper we push Hadamard's idea, which we call the graph transform [22]. However, even in the case V = a point, our proof of smoothness of the stable manifold is new; see [40].

One of our objectives is to allow more general submanifolds V in (1.1). A case of interest is where V is replaced by a foliation $\mathcal{F}$ of M and f is normally hyperbolic to each leaf of $\mathcal{F}$. There are stable and unstable manifolds of leaves and persistence under perturbation of f. An example of such an $\mathcal{F}$ is the orbit foliation for an Anosov flow -- f is the time-one map of the flow.

Anosov [3] showed that if the Anosov flow is slightly perturbed then the new foliation is isomorphic to the original one by a homeomorphism of M; this is his celebrated structural stability theorem. Instead of perturbing the flow, one may perturb just the time-one map. The new diffeomorphism f' is not generally a time-one map. Nevertheless it turns out that there is a new foliation $\mathcal{F}'$ near $\mathcal{F}$ invariant under f'. We show that this is true quite generally, except that $\mathcal{F}'$ is

not quite a foliation. It has C^r leaves but their tangent planes might vary only continuously. This kind of "lamination" is unavoidable, as Anosov showed [3, §24]; it can occur, for example, in the stable manifolds of orbits of even an analytic Anosov flow.

A further generalization of (1.1) allows V to be merely a leaf of a foliation or a union of leaves. An example is the nonwandering set of an Axiom A flow [48], f being the time-one map of the flow. We are led to consider rather general immersed submanifolds $i: V \to M$, the main restriction being that the tangent bundle of V is pulled back via i from a subbundle of TM over the closure of $i(V)$. This lets compactness of M be exploited without requiring compactness of V.

More general still is the concept of a pseudo-hyperbolic subset Λ for a map f. Instead of the tangent bundle of a submanifold, one has a Tf-invariant subbundle E_1 of $T_\Lambda M$ which has a Tf-invariant complement E_2 that Tf contracts (or expands) more sharply than E_1. This notion is useful for developing the strong stable and unstable manifolds of a normally hyperbolic submanifold or lamination, and also for studying center manifolds.

Now we define several kinds of normal hyperbolicity. Let V be a smooth ($= C^\infty$) compact submanifold of a smooth manifold M. Suppose $f: M \to M$ is a C^1 diffeomorphism and $f(V) = V$. Let $T_V M$, the tangent bundle of M over V, have a Tf-invariant splitting

$$T_V M = N^u \oplus TV \oplus N^s .$$

For any $p \in M$ put

$$Tf|T_pV = V_pf \qquad Tf|N_p^u = N_p^u f \qquad Tf|N_p^s = N_p^s f .$$

Thus, $T_pf = N_p^u f \oplus V_p f \oplus N_p^s f$.

Definition 1. f is *immediately relatively* r*-normally hyperbolic* at V iff f is C^r and there exists a Riemann structure on TM such that for all $p \in V$, $0 \le k \le r$:

(a) $m(N_p^u f) > \|V_p f\|^k$

and

(b) $\|N_p^s f\| < m(V_p f)^k$.

Recall that the *minimum norm* $m(A)$ of a linear transformation A is defined as

$$m(A) = \inf \{|Ax|: |x| = 1\} .$$

When A is invertible, $m(A) = \|A^{-1}\|^{-1}$.

Definition 2. f is *immediately absolutely* r*-normally hyperbolic* at V iff f is C^r and there is a Riemann structure on TM such that for all $p \in V$, $0 \le k \le r$:

(a) $\inf_p m(N_p^u f) > \sup_p \|V_p f\|^k$

and

(b) $\sup_p \|N_p^s f\| < \inf_p m(V_p f)^k$.

Definition 3. f is *eventually relatively* r*-normally hyperbolic* at V iff f is C^r and for all $p \in V$, $n \geq 0$, $0 \leq k \leq r$:

$$\text{(a)} \quad \frac{m(N_p^u f^n)}{\|V_p f^n\|^k} \geq \lambda^n / C$$

and

$$\text{(b)} \quad \frac{\|N_p^s f^n\|}{m(V_p f^n)^k} \leq C\mu^n$$

for some constants $0 < \mu < 1 < \lambda < \infty$, $0 < C < \infty$, and some Finsler on TM.

Definition 4. f is *eventually absolutely* r*-normally hyperbolic* at V iff f is C^r and for all $p \in V$, $n \geq 0$, $0 \leq k \leq r$:

$$\text{(a)} \quad \inf_p m(N_p^u f^n) \geq \frac{\lambda^n}{C} \sup_p \|V_p f^n\|^k$$

and

$$\text{(b)} \quad \|N_p^s f^n\| \leq C\mu^n \inf_p m(V_p f)^k$$

for some constants $0 < \mu < 1 < \lambda < \infty$, $0 < C < \infty$, and some Finsler on TM.

The reason for these names is this: "r-normally hyperbolic" means that the behavior of f normal to V dominates the behavior of f^k tangent to V for $0 \leq k \leq r$; "relative" means this dominance is required at each point of V, while "absolute" is the stronger requirement that the normal behavior at every point of V dominates the tangent behavior at every point. "Eventual", as contrasted to "immediate", means that the dominance is required of all iterates f^n for n exceeding some n_0.

Remark 1. Immediate absolute r-normal hyperbolicity (Definition 2) is the strongest property. In our original exposition of invariant manifolds [23] we used it, but most of our proofs were valid with Definitions 1 or 3.

Remark 2. If f is normally hyperbolic at V (in any of the three senses) so is f^{-1}, because N^u for f^{-1} is N^s for f, and N^s for f^{-1} is N^u for f.

Remark 3. Immediate relative r-normal hyperbolicity (Definition 2) implies eventual relative r-normal hyperbolicity (Definition 3). Eventual relative r-normal hyperbolicity is independent of the Finsler on TM: if (a), (b) in Definition 3 hold for a particular Finsler, they hold for any Finsler, perhaps with different constants. This is because V is compact.

Question. Does Definition 3 $\Rightarrow$ Definition 1? When $\dim V = 1$ or $f|V$ is an isometry the answer is yes. The proof is not hard.

Remark 4. Immediate Absolute $\Leftrightarrow$ Eventual Absolute is proved in (2.2).

CONVENTION. Without modifiers to the contrary "r-normally hyperbolic" means "immediately, relatively r-normally hyperbolic," and "normally hyperbolic" means "1-normally hyperbolic."

(1.2) *PROPOSITION. If* f *is eventually normally hyperbolic at* V *then the splitting of* $T_V M$ *is uniquely determined by* f.

Proof. Let $N^u \oplus TV \oplus N^s = T_V M = \bar{N}^u \oplus TV \oplus \bar{N}^s$ be Tf-invariant splittings exhibiting the normal hyperbolicity of f at V for Riemann structures $\mathcal{R}$, $\bar{\mathcal{R}}$. If $\bar{y} = x + v + y \in \bar{N}^s_p$ and $x \in N^u_p$, $v \in T_pV$, $y \in N^s_p$, $x + v \neq 0$, then

$$|T_p f^n(\bar{y})|_{\bar{\mathcal{R}}} = |N^u_p f^n(x) + V_p f^n(v) + N^s_p f^n(y)|_{\bar{\mathcal{R}}} .$$

Using continuity of N^u, TV, N^s, comparability of $\mathcal{R}$ and $\bar{\mathcal{R}}$, and $\lim_{n\to\infty} \|N^s_p f^n\|/\bar{\mu}^n m(V_p f^n) = 0$, $\mu < \bar{\mu} < 1$, we see that $|T_p f^n(\bar{y})|_{\bar{\mathcal{R}}}$ cannot tend to zero fast enough. Thus, $\bar{N}^s_p \subset N^s_p$ and by symmetry $N^s_p \subset \bar{N}^s_p$, so $N^s_p = \bar{N}^s_p$. Working with f^{-1}, the same is proved for the unstable planes. This proves (1.2).

§2. <u>The Linear Theory of Normal Hyperbolicity</u>. Let V be a compact C^1 submanifold of a smooth manifold M and let f be a C^1 diffeomorphism of M leaving V invariant. The definitions of normal hyperbolicity have several irritating features: it is required to know beforehand a Tf-invariant splitting of $T_V M$; a particular Riemann structure on TM must be found for definitions 1, 2; the whole sequence of iterates Tf^n must be considered in definition 3.

The third problem is treated by

(2.1) *PROPOSITION.* f *is eventually relatively* r*-normally hyperbolic at* V *iff all high powers* f^n, $n \geq$ *some* N, *are immediately relatively* r*-normally hyperbolic at* V.

Remark. Let us re-emphasize that we are unable to decide whether $N = 1$ in general.

Proof of (2.1). Let f be immediately relatively r-normally hyperbolic at V. Then

$$\inf_{p\in V} \frac{m(N_p^u f)}{\|V_p f\|^k} > \lambda > 1 > \mu > \sup_{p\in V} \frac{\|N_p^s f\|}{m(V_p f)^k}$$

$0 \le k \le r$, for some λ, μ. Clearly we can let $C = 1$ in Definition 3 and f is eventually relatively r-normally hyperbolic at V.

Assume eventual relative r-normal hyperbolicity. Since $C\mu^n < 1$ and $\lambda^n/C > 1$ for large n, it is clear that we get immediate relative r-normal hyperbolicity of f^n, n large. This proves (2.1).

Now let us consider the first problem -- a priori existence of an invariant splitting $T_V M = N^u \oplus TV \oplus N^s$. Let

$$\Sigma^b(T_V M) = \Sigma^b = \{\text{bounded sections } V \to T_V M\}$$

and let $f_b\colon \Sigma^b \to \Sigma^b$ be defined by

$$f_b(\sigma) = Tf \circ \sigma \circ f^{-1} \qquad \sigma \in \Sigma^b .$$

Σ^b is a Banachable space and f_b is the automorphism of Σ^b canonically induced by f. The closed subspace $\Sigma^b(TV)$ of sections having values in TV is f_b-invariant. Thus f_b induces a map $\bar{f}_b$ on the factor space $\bar{\Sigma}^b = \Sigma^b/\Sigma^b(TV)$.

(2.2) *PROPOSITION.* f *is immediately absolutely* 1-*normally hyperbolic at* V *iff the spectrum of* $f_b|\Sigma^b(TV)$ *lies in an annulus, centered at* 0, *disjoint from the spectrum of* $\bar{f}_b$. *For absolute normal hyperbolicity, "immediate"* $\Leftrightarrow$ *"eventual."*

As no invariant normal bundle was necessary to define $\bar{f}_b$ and spectra are independent of norms, the definition of absolute normal hyperbolicity offered by (2.2) is canonical. The proof of (2.2) is based on some general facts about hyperbolic Banach bundle automorphisms and will be given later in this section, after the proof of (2.10).

It seems reasonable to seek a similar "spectral condition" equivalent to relative normal hyperbolicity. Precisely, we want an operator canonically associated to f which is hyperbolic iff f is eventually normally hyperbolic at V. So far we have been unable to find one. Thanks are due to Ethan Akin for pointing out how our first attempt in this direction goes wrong.

Still trying to "intrinsically" characterize eventual normal hyperbolicity, we look at the abstract normal bundle $\bar{N}$ of V in TM,

$$\bar{N} = T_V M/TV$$

and the natural Tf-action on $\bar{N}$,

$$\bar{N}_p f([w]) = [T_p f(w)] \qquad [w] \in \bar{N}_p \ .$$

(2.3) *PROPOSITION. Eventual relative normal hyperbolicity is independent of choice of Finsler and is equivalent to the conjunction of* (a), (b)*:*

(a) $\bar{N}f$ *is a hyperbolic Banach bundle automorphism (see below) having invariant splitting* $\bar{N}^u \oplus \bar{N}^s = \bar{N}$;

and

(b) *For some Finslers on* TV, $\bar{N}$ *and for some integer* $n > 0$, Nf^n *dominates* $Tf^n|TV = Vf^n$:

$$\inf_{p\in V} \frac{m(\bar{N}^u_p f^n)}{\|V_p f^n\|} > 1 > \sup_{p\in V} \frac{\|N^s_p f^n\|}{m(V_p f^n)} \ .$$

Remark 1. This criterion does not assume V has a Tf-invariant normal bundle Besides, according to (2.5), below, (a) is equivalent to $\mathrm{spec}((\bar{N}f)_b) \cap S^1 = \emptyset$ where $(\bar{N}f)_b$ is the $\bar{N}f$-induced operator on the space $\Sigma^b(\bar{N})$ of bounded sections $V \to \bar{N}$. It is only condition (b) which fails to be spectral.

The proof of (2.3) is given below, after that of (2.2).

Remark. In (2.2,3) we care only about 1-normal hyperbolicity. Corresponding results for $r \geq 2$ are valid. See (6.3), for instance.

Question. Is there an intrinsic way to detect immediate relative normal hyperbolicity?

Now we come to the topic of normally hyperbolic flows. Suppose that $\{f^t\}$ is a C^1 flow on M leaving V invariant. The simplest definition of a flow being normally hyperbolic is that some individual map f^t is normally hyperbolic at V.

(2.4) *THEOREM. If one* f^t *is eventually normally hyperbolic at* V *then so are all the* f^t *except* f^0 = *identity. The splitting is independent of* t. *Similarly for absolute normal hyperbolicity.*

Question. Is (2.4) true for immediate normal hyperbolicity?

For developing the basic theory of normally hyperbolic flows (or noncompact group actions) this definition is best. However, when dealing with a flow, one has in mind the tangent vector field generating it, say X.

$$X_p = \frac{d}{dt}\Big|_{\substack{f^t(p)\\ t=0}}$$

We would like conditions on X that guarantee its flow is normally hyperbolic. Where V = one point, such conditions are: spec(DX) lies off the imaginary axis. If V is a general submanifold (even the circle) then the condition that DX have its normal (to V) eigenvalues off the imaginary axis is neither necessary nor sufficient for normal hyperbolicity of the X-flow [19]. It thus remains an open, fuzzy question to formulate unintegrated conditions on X at V that guarantee normal hyperbolicity of the X-flow.

After proving (2.2,3,4) we discuss the possible replacement of T_VM by a smaller bundle T_ZM where verification of normal hyperbolicity might be easier.

The next theorem contains the essence of (2.2,3).

(2.5) *THEOREM. A Banach bundle automorphism is hyperbolic iff it induces a hyperbolic automorphism on the Banach space of bounded (or continuous) sections.*

A Banach bundle E is a vector bundle whose fiber is a Banach space. Chart transfers are Banach space isomorphisms on fibers. We assume that some continuous norm, a Finsler, has been defined on the fibers. An automorphism of E is a fiber preserving homeomorphism linear on each fiber, such that $\|F|E_x\|$, $\|F^{-1}|E_x\|$ are

$$\begin{array}{ccc} E & \xrightarrow{F} & E \\ \downarrow & & \downarrow \\ X & \xrightarrow{f} & X \end{array}$$

uniformly bounded. Here E_x is the fiber over x. We take the obvious definition that F is hyperbolic iff it leaves invariant a continuous splitting $E = E_1 \oplus E_2$, and, respecting some equivalent Finsler on E, Tf expands E_1 and contracts E_2. The induced automorphism on the space of sections of E is given by

$$F_b(\sigma)(x) = F \circ \sigma \circ f^{-1}(x) .$$

To prove (2.5) we need two lemmas.

(2.6) *LEMMA. If* H *is a closed subspace of the Banach space* E *then either* $H = E$ *or else* E *has vectors* x *nearly orthogonal to* H: $d(x,H)/|x| \doteq 1$.

Proof. This is a restatement of the Hahn-Banach Extension Theorem [44].

(2.7) *LEMMA. Let* $T,T': E \to F$ *be Banach space isomorphisms and let* E *be split in two ways* $E = E_1 \oplus E_2$, $E = E_1' \oplus E_2'$. *Let* $\pi_j: E \to E_j$ *be the projections,* $j = 1, 2$, *kernel* $\pi_1 = E_2$, *kernel* $\pi_2 = E_1$. *Then*

$$x \in E_2' \Rightarrow \frac{|\pi_1(x)|}{|\pi_2(x)|} \leq \frac{\|T_2\| + \|T_2'\| + \|T-T'\|}{m(T_1) - \|T_2'\| - \|T-T'\|}$$

if the denominator is positive. Here $T_j = T|E_j$, *and* $T_j' = T'|E_j'$, $j = 1, 2$.

Proof. Let $x \in E_2'$. Then $x = \pi_1 x + \pi_2 x$ so

$$|T'x| = |T_2'x| \leq \|T_2'\||x| \leq \|T_2'\|(|\pi_1 x| + |\pi_2 x|) .$$

Also, $T'x = T(\pi_1 x) + T(\pi_2 x) + (T'-T)(x)$ so that

$$|T'x| \geq m(T_1)|\pi_1 x| - \|T_2\||\pi_2 x| - \|T-T'\|(|\pi_1 x| + |\pi_2 x|) .$$

Combining these two inequalities gives

$$[m(T_1) - \|T-T'\| - \|T_2'\|]|\pi_1 x| \leq [\|T_2'\| + \|T_2\| + \|T-T'\|]|\pi_2 x|$$

which proves (2.7).

The inequality can be re-written as

$$(2.7') \qquad \|\pi_1|E_2'\| \leq \frac{\|T_2\| + \|T_2'\| + \|T-T'\|}{m(T_1) - \|T_2'\| - \|T-T'\|} \|\pi_2\|$$

when the denominator is positive.

Proof of (2.5). Assume that F is hyperbolic. Then $E = E_1 \oplus E_2$ and

$$\Sigma^b = \Sigma^b(E_1) \oplus \Sigma^b(E_2)$$

is obviously a splitting respecting which F_b is hyperbolic.

Now assume F_b is hyperbolic with splitting

$$\Sigma^b = \Sigma_1 \oplus \Sigma_2 .$$

The splitting is characterized by

$$\sigma \in \Sigma_1 \Leftrightarrow |F_b^{-n}\sigma| \to 0 \quad \text{as} \quad -n \to -\infty$$

$$\sigma \in \Sigma_2 \Leftrightarrow |F_b^{n}\sigma| \to 0 \quad \text{as} \quad n \to \infty$$

[44]. Let $\Pi_j: \Sigma^b \to \Sigma_j$ be the projections, $j = 1, 2$.

For each x in the base space X, let the δ_x operator $\delta_x: \Sigma^b \to \Sigma^b$ be defined by

$\delta_x\sigma$ is the section vanishing except at x,
at x it has value $\sigma(x)$.

The crucial fact to observe is

$$\delta_x\Pi_j = \Pi_j\delta_x .$$

For any $\sigma \in \Sigma^b$, $\delta_x\sigma$ can be expressed uniquely as the sum of elements in Σ_1, Σ_2

$$\delta_x\sigma = \Pi_1(\delta_x\sigma) + \Pi_2(\delta_x\sigma)$$

according to the splitting. Another expression for $\delta_x\sigma$ is

$$\delta_x\sigma = \delta_x(\Pi_1\sigma) + \delta_x(\Pi_2\sigma)$$

since δ_x is linear and $\sigma = \Pi_1\sigma + \Pi_2\sigma$. But $\delta_x(\Pi_1\sigma) \in \Sigma_1$ since

$$|F_b^{-n}(\delta_x\Pi_1\sigma)| \leq |F_b^{-n}\Pi_1\sigma| \to 0 \quad \text{as} \quad -n \to -\infty$$

and similarly $\delta_x(\Pi_2\sigma) \in \Sigma_2$. By uniqueness, the summands in the two formulas for $\delta_x\sigma$ are equal and the commutativity of δ_x and Π_j is proved, $j = 1, 2$.

This gives a splitting of E_x, $E_x = E_{1x} \oplus E_{2x}$ defined by

$$E_{1x} = i_x^{-1}\delta_x\Sigma_1$$

$$E_{2x} = i_x^{-1}\delta_x\Sigma_2$$

where $i_x: E_x \to \Sigma^b$ is the canonical isometry onto the subspace of δ-sections based at x. Thus the projections are given by

$$\begin{aligned} &\pi_{jx}: E_x \to E_{jx} \\ &\pi_{jx} = i_x^{-1} \circ \Pi_j \circ i_x \end{aligned} \qquad j = 1, 2 .$$

This yields the important fact that $\|\pi_{jx}\|$ is uniformly bounded, $x \in X$. Clearly the splitting is F-invariant and F contracts E_2, expands E_1. It remains to show that the splitting of E_x depends continuously on X.

For any pair of points $x, x' \in X$ that are sufficiently close together let

$$\theta_{x'x}: E_{x'} \to E_x$$

be an isomorphism, depending continuously on (x,x'), with $\theta_{xx} = I_x$. This θ is called a "connector", serves as parallel translation, and was constructed in [24]. By continuity θ, $\|\theta_{x'x}\|$ and $m(\theta_{x'x}) \to 1$ as $(x',x) \to \Delta$ = the diagonal of $X \times X$.

Fix some $x \in X$. By continuity of the splitting $E_{1x} \oplus E_{2x}$ we mean that, for each x,

$$\theta_{x'x}(E_{jx}) = \text{graph}(g_{jx'}) \qquad j = 1, 2$$

where $g_{1x'}: E_{1x} \to E_{2x}$, $g_{2x'}: E_{2x} \to E_{1x}$, and $\|g_{1x'}\| + \|g_{2x'}\| \to 0$ as $x' \to x$.

We shall consider the maps $F_x^n: E_x \to E_{f^n x}$, $F_{x'}^n: E_{x'} \to E_{f^n x'}$ for appropriately large n. Here $f: X \to X$ is the homeomorphism of the base covered by F. Using the transfer maps we can let

$$\begin{aligned} T &= F_x^n \\ T' &= \theta_{f^n x', f^n x} \circ F_{x'}^n \circ \theta_{x,x'} . \end{aligned}$$

Both T and T' are isomorphisms $E_x \to E_{f^n x}$. When n is fixed and $x' \to x$ then $T' \to T$ because F is continuous.

The space E_x is split in two ways

$$E_x = E_{1x} \oplus E_{2x} \qquad E_x = E'_{1x} \oplus E'_{2x}$$

$$E'_{jx} = \theta_{x'x} E_{jx'} \qquad j = 1, 2 .$$

We know that T carries E_{jx} onto $E_{jf^n x}$ and T' carries E'_{jx} onto $E'_{jf^n x}$. For simpler notation we suppress the x, x': $E_1 = E_{1x}$, $\pi_1 = \pi_{1x}, \ldots$. We know that

$$\|\pi_j\|, \|\pi'_j\| \leq M$$

for some bound M, if x' is near x, because the θ's are nearly orthogonal.

By (2.7') we can choose n so large and x' so near x that

$$\|\pi_1|E'_2\|\|\pi'_2\| < 1 .$$

This makes $\pi_1(E'_1) = E_1$ because $\pi_1 E'_1$ is closed and each $x \in E_1$ has

$$d(x,\pi_1 E'_1) \leq |x - \pi_1\pi'_1 x| = |\pi_1(I-\pi'_1)x| = |\pi_1\pi'_2 x| \leq \|\pi_1|E'_2\|\|\pi'_2\||x|$$

contradicting (2.6) unless $\pi_1 E'_1 = E_1$.

On the other hand consider S, S': $E_x \to E_{f^{-n}x}$ defined by

$$S = F_x^{-n}$$

$$S' = \theta_{f^{-n}x' f^{-n}x} \circ F_{x'}^{-n} \circ \theta_{xx'} .$$

The hypotheses on E_1, E_2 become reversed, as do those on E'_1, E'_2. Hence by (2.7)

$$x \in E'_1 \Rightarrow \frac{|\pi_2 x|}{|\pi_1 x|} \leq \frac{\|S_1\| + \|S'_1\| + \|S-S'\|}{m(S_2) - \|S'_1\| - \|S-S'\|}$$

so that for n large and x' near x, $|\pi_2 x|/|\pi_1 x|$ is small. Together with $\pi_1 E'_1 = E_1$, this means that

$$E'_1 \text{ is the graph of } g_1: E_1 \to E_2, \quad \|g_1\| \text{ is small}$$

for x' near x. Hence $E'_1 \to E_1$ as $x' \to x$, and so half the splitting depends

continuously on x. Replacing F by F^{-1} reverses all rôles and shows the other half to be continuous also.

Remark 1. Allowing F_b to have non-zero kernel in Σ_2 does not destroy the theorem. Its proof is similar except that separate estimates must be used to show E_1' near E_1 and E_2' near E_2.

Remark 2. If E is the restriction to X of a bundle $\hat{E}$ defined over $\hat{X} \supset X$ and if $\hat{F}: \hat{E} \to \hat{E}$ is a Banach bundle automorphism extending F then hyperbolicity of F implies hyperbolicity of $\hat{F}|\bar{E}$ where $\bar{E} = \hat{E}\,|\,\mathrm{Closure}(X)$. For the proof of (2.5) shows that the splitting over X is uniformly continuous and hence that it extends uniquely to a continuous splitting on the closure.

Now we present a sharpening of the Spectral Radius Theorem [44]. It is due to Holmes [25].

(2.8) *PROPOSITION. If* A *is an automorphism of a Banach space* E *and the spectrum of* A *is contained in the annulus*

$$\{z \in \mathbb{C}:\ t_1 < |z| < t_2\}$$

then E *has a new norm* $|\ |_*$ *such that*

$$m_*(A) > t_1 \qquad \|A\|_* < t_2 .$$

Moreover, if E *is a Hilbert space then the new norm* $|\ |_*$ *arises from an inner product.*

Proof. Let the original norm on E be $|\ |$ and choose $t_1 < \tau_1 < \tau_2 < t_2$ such that $\mathrm{spec}(A) \subset \{z \in \mathbb{C}:\ \tau_1 < |z| < \tau_2\}$. Put

$$|x|_*^2 = \sum_{k=1}^{\infty} (\tau_1^k |A^{-k}x|)^2 + \sum_{k=0}^{\infty} (\tau_2^{-k} |A^k x|)^2 .$$

Since the spectrum is compact, it lies off the boundaries of the annulus and the series converge by the Spectral Radius Theorem. Clearly

$$|Ax|_*^2 = \sum_{k=1}^{\infty} (\tau_1^k |A^{-k+1}x|)^2 + \sum_{k=0}^{\infty} (\tau_2^{-k} |A^{k+1}x|)^2$$

$$= \tau_1^2\left(\sum_{k=0}^{\infty}(\tau_1^k|A^{-k}x|)^2\right) + \tau_2^2\left(\sum_{k=1}^{\infty}(\tau_2^{-k}|A^k x|)^2\right) .$$

Note that the zero-th term of first sum, $\tau_1^0|A^{-0}x|$ is the missing zero-th term of the second sum, $\tau_2^0|A^0x|$. Hence

$$|Ax|_*^2 \le \tau_2^2|x|_*^2 \qquad |Ax|_*^2 \ge \tau_1^2|x|_*^2$$

since $\tau_2 > \tau_1$. This proves the lemma.

Remark. A finite sum would also suffice to define $|\ |_*$. Likewise, any norm near $|\ |_*$ serves as well.

Question. To what extent is (2.8) true for an automorphism A of a Banach bundle? For instance, can

$$\frac{\|A_p\|}{\|A_p^n\|^{1/n}} \le 1+\varepsilon \qquad \frac{m(A_p)}{m(A_p^n)^{1/n}} \ge 1-\varepsilon$$

be forced for all large n by the right choice of Finsler? $A_p = A|E_p$, E_p = fiber at p. Assume the base is compact.

Using (2.8), we can draw the following conclusion from Theorem 2.5.

(2.9) *COROLLARY. If* $F: E \to E$ *is a Banach bundle isomorphism and the spectru of* F_b *is contained in the disjoint open annuli* $A_1,\ldots,A_m$

$$A_i = \{z \in \mathbb{C}: t_i > |z| > t_{i+1}\}$$

then E *has a continuous* F*-invariant splitting* $E = E_1 \oplus \cdots \oplus E_m$. *Vectors in* E_i *are characterized by*

$$\lim_{n\to\infty} \frac{|F^n x|}{t_i^n} = 0 \qquad \lim_{n\to\infty} \frac{|F^{-n}x|}{t_{i+1}^{-n}} = 0$$

$E_1 \oplus \cdots \oplus E_m$ *is unique among all* F*-invariant, a priori discontinuous splittings* $E = E_1' \oplus \cdots \oplus E_m'$ *with* $\operatorname{spec}(F_b|\Sigma^b(E_i')) \subset A_i$. *Moreover, there is a Finsler on* E *such that* $m(F|E_{ix}) > t_{i+1}$ *and* $\|F|E_{ix}\| < t_i$.

Proof. Uniqueness follows at once from the asserted characterization. If

$m = 1$ then the same formulas as in (2.8) give the Finsler.

Suppose $m = 2$. Then $t_2^{-1}F: E \to E$ is a Banach bundle isomorphism and $(t_2^{-1}F)_b = t_2^{-1}F_b$ has spectrum off the unit circle. By the Spectral Decomposition Theorem [44] and (2.8) it is hyperbolic. Then (2.5) guarantees and characterizes the asserted splitting; (2.8) gives the Finsler.

Suppose (2.9) is known for $m - 1 \geq 2$. Consolidate the last two annuli into $\bar{A} = \{z \in \mathbb{C}: t_{m-1} > |z| > t_m\}$. The spectrum of F_b is contained in $A_1, \ldots, A_{m-2}, \bar{A}$. By induction, F leaves invariant a continuous splitting $E = E_1 \oplus \cdots \oplus E_{m-2} \oplus \bar{E}$ appropriately characterized. Restricting F to the bundle $\bar{E}$ over X we are again in the case of two annuli, A_{m-1} and A_n. Hence $\bar{E}$ splits, the summands are appropriately characterized, and (2.9) is proved.

Under restrictions and quotients, spectra behave as follows.

(2.10) *PROPOSITION. If* T *is an automorphism of a Banach space* E *leaving invariant the closed non-zero subspace* H *then*

(a) $\mathrm{Spec}(T) \subset \mathrm{Spec}(\bar{T}) \cup \mathrm{Spec}(T|H)$

(b) *The annular hull of* $\mathrm{Spec}(T|H)$ *meets* $\mathrm{Spec}(T)$, *where* $\bar{T}: E/H \to E/H$ *is the quotient of* T.

Proof. (a) is well known [44]. (b) is easily verified, for if $A = \{z \in \mathbb{C}: t \leq |z| \leq \tau\}$ is the smallest annulus centered at 0 containing $\mathrm{spec}(T|H)$ and $\mathrm{spec}(T) \cap A = \emptyset$ then E has a T-invariant splitting, $E = E_1 \oplus E_2$, corresponding to the parts of $\mathrm{spec}(T)$ beyond A and enclosed by A. Any non-zero vectors $e_1 \in E_1$, $e_2 \in E_2$ have

$$\lim_{n\to\infty} \frac{|T^n e_1|}{\tau^n} = \infty \qquad \lim_{n\to\infty} \frac{|T^{-n} e_2|}{t^{-n}} = \infty$$

while any $h \in H$ has these limits finite. If h could be expressed $h = e_1 + e_2$ then $\lim_n \tau^{-n}|T^n h| = \infty$ unless $e_1 = 0$ and $\lim_n t^n|T^{-n}h| = 0$ unless $e_2 = 0$. Hence $e_1 = e_2 = 0$ and $H = 0$, proving (2.10).

Question. Can $\mathrm{spec}(T|H)$ be disjoint from $\mathrm{spec}(T)$?

Answer, due to Ethan Akin, "no". Besides, $\mathrm{spec}(T|H) - \mathrm{spec}(T)$ is either empty or consists of components of $\mathbb{C} - \mathrm{spec}(T)$.

Remark. Were (a) an equality, our task of proving the continuity of the

splitting in (2.5) could have been simplified by passing to the closed F_b-invariant subspace of continuous sections $\Sigma^c(E)$.

Now we are ready to prove (2.2), (2.3), the main theorems of §2.

Proof of (2.2). Recall that f was a C^1 diffeomorphism of M leaving the submanifold V invariant. We had defined $f_b\colon \Sigma^b(T_VM)$ by

$$f_b\sigma = Tf \circ \sigma \circ f^{-1} .$$

This left $\Sigma^b(TV)$ invariant and we formed the quotient $\bar{f}_b\colon \bar{\Sigma} \to \bar{\Sigma}$ for $\bar{\Sigma} = \Sigma^b(T_VM)/\Sigma^b(TV)$.

By hypothesis and (2.10), the spectrum of f_b is contained in three disjoint annuli

$$A^u \cup A \cup A^s .$$

By (2.9), T_VM has a corresponding splitting: $E_1 \oplus E_2 \oplus E_3$. It remains to check that $E_2 = TV$.

The inclusion $E_2 \supset TV$ holds because in (2.9) E_2 is characterized as those vectors in T_VM which have

$$\lim_n \tau^{-n}|(T_xf^n)v| = 0 \qquad \lim_n t^n|(T_xf^{-n})v| = 0$$

where $A = \{z \in \mathbb{C}\colon t<|z|<\tau\} \supset \operatorname{spec}(f_b|\Sigma^b(TV))$ and does not meet $\operatorname{spec}(\bar{f}_b)$.

Let $\bar{E}_2 = E_2/TV$. Thus $\bar{E}_2 \subset T_VM/TV$. But $\Sigma^b(\bar{E}_2)$ is a closed $\bar{f}_b$-invariant subspace of $\bar{\Sigma}$ and (since the internal and external spectral radius of $Tf|E_2$ lie in A)

$$\operatorname{spec}(\bar{f}_b|\Sigma^b(\bar{E}_2)) \subset A$$

while $\operatorname{spec}(\bar{f}_b) \subset A^u \cup A^s$, contradicting (2.10b). Hence $\bar{E}_2 = 0$ and $E_2 = TV$.

If f is eventually absolutely normally hyperbolic at V then, from the Spectral Radius Theorem, $\operatorname{spec}(\bar{f}_b)$ lies in annuli, centered at 0, disjoint from $\operatorname{spec}(f_b|\Sigma^b(TV))$. Thus, by the first part of (2.2), f is immediately absolutely normally hyperbolic at V. The converse is clear.

Proof of (2.3). Let $|\ |$, $|\ |_*$ be Finslers on T_VM. They are equivalent

since V is compact: $K^{-1}|\ |_* \leq |\ | \leq K|\ |_*$. If conditions (a), (b) in the definition of eventual relative normal hyperbolicity are fulfilled for the Finsler $|\ |$, then, with respect to $|\ |_*$, the ratios in question are affected by at most a constant multiple, K^2, which we can absorb into the constant C, showing that (a), (b) hold for $|\ |_*$ also.

Assume f is eventually relatively normally hyperbolic at V. Clearly the hyperbolic splitting $N^u \oplus TV \oplus N^s = T_VM$ induces an $\bar{N}f$-invariant splitting $\bar{N} = \bar{N}^u \oplus \bar{N}^s$ when we divide T_VM out by TV, and clearly $\bar{N}f$ is hyperbolic respecting $\bar{N}^u \oplus \bar{N}^s$.

Assume conditions (a), (b) of (2.3). In particular, Finslers on TV, $\bar{N}$ are specified. Choose any continuous normal bundle $\hat{N}$ of V in M, $TV \oplus \hat{N} = T_VM$. Pull the Finsler and splitting back from $\bar{N}$ to $\hat{N}$ via

$$\hat{N} \hookrightarrow T_VM \longrightarrow T_VM/TV = \bar{N} = \bar{N}^u \oplus \bar{N}^s$$

$$\approx$$

Put a Finsler on T_VM making $TV \hookrightarrow T_VM$ and $\hat{N} \hookrightarrow T_VM$ isometries. Express Tf respecting $\hat{N}^u \oplus TV \oplus \hat{N}^s$ as

$$T_pf = \begin{bmatrix} \hat{N}^u_pf & 0 & 0 \\ C_p & V_pf & F_p \\ 0 & 0 & \hat{N}^s_pf \end{bmatrix} \qquad p \in V$$

The zero entries are consequences of Tf-invariance of TV, $\hat{N}^u \oplus TV$, and $TV \oplus \hat{N}^s$.

Let Tf act naturally on the bundle L^u whose fiber at p is

$$L^u_p = L(\hat{N}^u_p, T_pV)$$

by

$$L^uf\colon P \longmapsto (C_p + (V_pf)\circ P)\circ(N^u_pf)^{-1} .$$

Thus L^uf is a "linear graph transform"

$$\mathrm{graph}(L^uf(P)) = Tf(\mathrm{graph}(P)) .$$

Clearly $L^uf^n = (L^uf)^n$. By condition (b), we see that

$$\begin{array}{ccc} L^u & \xrightarrow{L^u f^n} & L^u \\ \downarrow & & \downarrow \\ V & \xrightarrow{f^n|V} & V \end{array}$$

is a uniform fiber contraction, and as such has a unique continuous invariant section $P^u\colon V \to L^u$ [22 or (3.1) of this paper]. Its graphs

$$N_p^u = \text{graph } P^u(p) \subset \hat{N}_p^u \oplus T_p V$$

provide a Tf-invariant bundle N^u, $N^u \oplus TV = \hat{N}^u \oplus TV$.

Arguing with f^{-n}, we produce a Tf-invariant bundle N^s, $TV \oplus N^s = TV \oplus \hat{N}^s$. Define a new Finsler $|\ |_*$ on $T_V M$ making the isomorphisms $N^u \to \bar{N}^u$, $N^s \to \bar{N}^s$ isometries, and having $|\ | = |\ |_*$ on TV. Respecting $|\ |_*$, it is clear that f is eventually relatively normally hyperbolic at V.

On the way to proving (2.4) we can use the technique of (2.3) to get some abstract perturbation results.

(2.11) *THEOREM. Let* E *be a Banach bundle over the compact base* X. *Let* $F\colon E \to E$ *be an automorphism of* E *leaving invariant the continuous splitting* $E = E_1 \oplus E_2$. *Assume*

$$m(F_{1x}) > \|F_{2x}\| \qquad x \in X$$

where $F_{jx} = F|E_{jx}$. *If* $\bar{F}$ *is a Banach bundle automorphism near* F *then* E *has an* $\bar{F}$*-invariant continuous splitting* $E = \bar{E}_1 \oplus \bar{E}_2$ *near* $E_1 \oplus E_2$. *Besides* $\bar{E}_j$ *is the only* $\bar{F}$*-invariant subbundle of* E *near* E_j, $j = 1, 2$.

Proof. Write

$$\bar{F}_x = \begin{bmatrix} A_x & B_x \\ C_x & D_x \end{bmatrix} \text{ respecting } E_1 \oplus E_2 .$$

Let L be the bundle over X whose fiber at x is $L(E_{1x}, E_{2x})$. The natural action of $\bar{F}$ on L is

$$L_x \ni P \longmapsto (C_x + K_x P)\circ(A_x + B_x P)^{-1} \in L_{\bar{h}x}$$

where $\bar{h}$ is the base map covered by $\bar{F}$. This makes $\text{graph}(L_x \bar{F}(P)) = \bar{F}(\text{graph}(P))$.

Since $\bar{F}$ is near F, we see that

$$m(A_x) \doteq m(F_{1x}) \qquad \|B_x\| \doteq 0$$

$$\|C_x\| \doteq 0 \qquad \|D_x\| \doteq \|F_{2x}\| .$$

Let $L\bar{F}$ be the map induced on sections of the form $X \to L(1) = \{P \in L: \|P\| \leq 1\}$. As observed in [22], $L\bar{F}$ is a well defined contraction and has fixed point near 0. This produces an $\bar{F}$-invariant continuous subbundle $\bar{E}_1$ near E_1 by setting $E_{1x} = \text{graph}(P_x)$ where $x \mapsto P_x$ is the $L\bar{F}$-fixed point. It also proves uniqueness of $\bar{E}_1$ near E_1.

Dealing with F^{-1} and $\bar{F}^{-1}$ we produce $\bar{E}_2$. For $m(F_{1x}) > \|F_{2x}\|$ implies $m(F^{-1}_{2x'}) > \|F^{-1}_{1x'}\|$, $x' = h(x)$.

(2.12) *COROLLARY. Let* E, F, $\bar{F}$ *be as above but let* $E = E_1 \oplus \cdots \oplus E_k$ *be an* F*-invariant continuous splitting such that*

$$m(F_{jx}) > \|F_{j+1x}\| \qquad 1 \leq j \leq k-1 \qquad x \in X .$$

Then there is an $\bar{F}$*-invariant continuous splitting* $E = \bar{E}_1 \oplus \cdots \oplus \bar{E}_k$ *near* $E_1 \oplus \cdots \oplus E_k$. *Besides* $\bar{E}_j$ *is the only* $\bar{F}$*-invariant subbundle of* E *near* E_j, $1 \leq j \leq k$.

Proof. (2.11) is the case $k = 2$. Let k be ≥ 3 and assume (2.12) known for $k-1$. Amalgamate E_{k-1} and E_k to form G. Put the "max" Finsler on E: $|y_1 + \cdots + y_k| = \max(|y_1|, \ldots, |y_k|)$, $y_j \in E_j$. By (2.12: k-1) there is a splitting $\bar{E}_1 \oplus \cdots \oplus \bar{E}_{k-2} \oplus \bar{G}$ for $\bar{F}$, and $\bar{E}_1, \ldots, \bar{E}_{k-2}$ are the unique $\bar{F}$-invariant subbundles of E near $E_1, \ldots, E_{k-2}$. Amalgamating E_1 and E_2 as $H = E_1 \oplus E_2$ produces unique $\bar{F}$-invariant subbundles $\bar{H}$, $\bar{E}_3, \ldots, \bar{E}_k$ near H, $E_3, \ldots, E_k$. Thus, except where $k = 3$, induction proves (2.12).

When $k = 3$, we have unique $\bar{F}$-invariant subbundles $\bar{E}_1$, $\bar{E}_3$, $\bar{G}$, $\bar{H}$. We claim that $\bar{G} \cap \bar{H} = \bar{E}_2$ is an $\bar{F}$-invariant subbundle near E_2. Clearly $\bar{G} \cap \bar{H}$ is $\bar{F}$-invariant. Since $\bar{G}_x$ and $\bar{H}_x$ are subspaces of E_x near G_x and H_x they intersect in a subspace near $G_x \cap H_x = E_{2x}$. It depends continuously on x. This is a sort of linear transversality lemma which is proved as (2.13) below. Otherwise, the proof of (2.12) is complete.

(2.13) *LEMMA. If* $E = E_1 \oplus E_2 \oplus E_3$ *is a split Banach space with the "max" norm and if* $P \in L(E_1 \oplus E_2, E_3)$, $\|P\| < 1$, $Q \in L(E_2 \oplus E_3, E_1)$, $\|Q\| < 1$ *then there is a unique* $R \in L(E_2, E_1 \oplus E_3)$ *such that*

$$\mathrm{graph}(R) = \mathrm{graph}(P) \cap \mathrm{graph}(Q) .$$

Furthermore $(P,Q) \mapsto R$ *is smooth.*

Proof. The R we seek can be written as $R = R_1 + R_3$ where $R_1: E_2 \to E_1$, $R_3: E_2 \to E_3$. The equation to be solved is

$$R - (Q\circ(I_2+R_3),\ P\circ(R_1+I_2)) = 0$$

where $I_2: E_2 \to E_2$ is the identity. By the Implicit Function Theorem there is a unique solution to this equation for small $\|P\|$, $\|Q\|$ and it depends nicely on P, Q. In fact it is easy to check that the best bounds for solvability are $\|P\|, \|Q\| < 1$.

The techniques of (2.11) imply at once the following fact which we have used elsewhere.

(2.14) *PROPOSITION. The hyperbolic automorphisms of a Banach bundle* E *form an open subset of the topological space of all bundle automorphisms of* E. *The bundlesplitting varies continuously.*

Remark. If $F: E \to E$ is hyperbolic and $F': E \to E$ is near F then the naturally induced maps on the space of bounded sections of E, F_b, $F'_b: \Sigma^b(E) \circlearrowleft$, are *not* nearby in the space of operators on $\Sigma^b(E)$. Thus, it is not immediate that $\mathrm{spec}(F'_b)$ should be near $\mathrm{spec}(F_b)$. A proof of (2.14) by general spectral theory might be interesting to have.

As a consequence of (2.12) we get

(2.15) *THEOREM. If* f *is normally hyperbolic at* V, f *is* C^1 *near* f, *and* $\bar{f}(V) = V$ *then* $\bar{f}$ *is normally hyperbolic at* V *and the unique splitting* $\bar{N}^u \oplus TV \oplus \bar{N}^s$ *for* $\bar{f}$ *is near that of* f.

Proof. Applying (2.12) to $F = Tf$, $\bar{F} = T\bar{f}$, $E = T_VM = N^u \oplus TV \oplus N^s$ gives a $T\bar{f}$-invariant splitting $T_VM = \bar{E}_1 \oplus \bar{E}_2 \oplus \bar{E}_3$ near $N^u \oplus TV \oplus N^s$. By uniqueness in (2.12), $TV = \bar{E}_2$, since $T\bar{f}$ leaves TV invariant. Since $\bar{E}_1 \doteq N^u$, $\bar{E}_3 \doteq N^s$, and $T\bar{f} \doteq Tf$, it is clear that $\bar{f}$ is normally hyperbolic at V and $E_1 \oplus TV \oplus E_3$ displays it. By (2.12) the splitting depends continuously on $\bar{f}$.

Proof of (2.4). Let $\{f^t\}$ be a flow leaving V invariant. Suppose f^a is eventually normally hyperbolic at V and $N^u \oplus TV \oplus N^s$ exhibits it. Then f^b is

immediately normally hyperbolic at V for some $b > a$. We know that $f^t(V) = V$ and that $f^t \to f^b$ C^1 as $t \to b$. Thus, by (2.15), f^t is normally hyperbolic at V, $t \doteq b$. Let

$$T_V M = {}^tN^u \oplus TV \oplus {}^tN^s$$

exhibit it, ${}^tN^u \doteq N^u$, ${}^tN^s \doteq N^s$. We claim equality.

Consider $\bar{N}^u = Tf^t(N^u)$ for $t \doteq b$. Then

$$Tf^b(\bar{N}^u) = Tf^b(Tf^t(N^u)) = Tf^t(Tf^b(N^u)) = Tf^t(N^u) = \bar{N}^u ,$$

likewise $Tf^b(\bar{N}^s) = \bar{N}^s$ for $\bar{N}^s = Tf^t(N^s)$. If $t \doteq b$ then $\bar{N}^u \doteq N^u$, $\bar{N}^s \doteq N$. Thus, $\bar{N}^u \oplus TV \oplus \bar{N}^s$ also exhibits the normal hyperbolicity of f^b at V. By (1.1) $\bar{N}^u = N^u$, $\bar{N}^s = N^s$; that is,

$$Tf^t(N^u) = N^u \qquad Tf^t(N^s) = N^s \qquad t \doteq b .$$

By (1.1) applied to f^t this shows ${}^tN^u \equiv N^u$, ${}^tN^s \equiv N^s$ for $t \doteq b$. For t far from b, but of the same sign, the equalities persist by continuity and reapplication of the local equality. Thus,

$$Tf^t(N^u) \equiv N^u \qquad Tf^t(N^s) \equiv N^s \qquad t \in R .$$

To prove that all f^t are eventually normally hyperbolic at V is easy. Write

$$(f^t)^n = f^{nt} = f^{kb-r} = f^{-r}f^{kb}$$

where $|r| < b$ and $kb \geq tn$. Thus

$$\frac{m(N_p^u f^{nt})}{\|V_p f^{nt}\|} \geq c^2 \frac{m(N_p^u f^{kb})}{\|V_p f^{kb}\|} \geq c^2\lambda^k \geq c^2\left(\lambda^{\frac{t}{b}}\right)^n$$

where $c = \inf_{|t|\leq b} m(Tf^t)$. Similarly, for N^s. This proves that f^t is eventually normally hyperbolic at V and completes the proof of (2.4).

Combining (2.2) with Remark 2 on page 14 we get many results on extending hyperbolicity to closures. For instance

(2.16) *PROPOSITION. Let* $f: M \to M$ *be a diffeomorphism leaving* $\Lambda \subset M$ *invariant and let* Tf *leave a splitting* $T_\Lambda M = E^u \oplus E^s$ *invariant. Suppose*

$$\|Tf^n|E^s\| \le C\lambda^n \qquad \|Tf^{-n}|E^u\| \le C\lambda^n$$

for all $n \ge 0$ *and some constants* C, λ *with* $\lambda < 1$. *Then the* Λ *is a hyperbolic set for* f. *In particular* E^u, E^s *have locally constant dimension and are continuous on* Λ.

The next result shows that normal hyperbolicity of f at V depends only on the behavior of Tf over a certain compact subset, the centrum of $f|V$. If h is a homeomorphism of a compact metric space X, recall that $\Omega(h)$ is the set of nonwandering points of h: x is nonwandering iff each neighborhood of x, U, returns to reintersect U under a nonzero h iterate -- $h^nU \cap U \ne \emptyset$ for some $n \ne 0$. The set $\Omega(h)$ is closed and h-invariant.* If we restrict h to $\Omega(h)$ and replace X by $\Omega(h)$ we get $\Omega^2(h) \subset \Omega(h) \subset X$. Continuing in this way, we generate the Birkoff central series

$$X \supset \Omega \supset \Omega^2 \supset \Omega^3 \supset \cdots$$

of h. It ends at a countable ordinal $\sigma = \sigma(f)$. That is, $\Omega^{\sigma+1} = \Omega^\sigma$. The final set Ω^σ is called the centrum of h, $z(h)$. It is the closure of the recurrent (= Poisson stable) points [7]. To pass a limit ordinal β we define $\Omega^\beta = \bigcap_{\gamma<\beta} \Omega^\gamma$. Note that each Ω^β is compact and f-invariant.

(2.17) *THEOREM. Suppose* $f: M \to M$ *is a diffeomorphism leaving the compact* C^1 *manifold* V *invariant and* T_VM *has a continuous splitting* $\hat{N}^u \oplus TV \oplus \hat{N}^s$ *such that* $\hat{N}^u \oplus TV$, $TV \oplus \hat{N}^s$ *are* Tf*-invariant. If* T_zf *is eventually normally hyperbolic respecting* $\hat{N}^u_z \oplus T_zV \oplus \hat{N}^s_z$ *where* $z = z(f|V)$ *then* f *is eventually normally hyperbolic at* V.

Proof. Let $T_\beta M$ denote $T_{\Omega^\beta}M$, $T_\beta f$ denote $Tf|T_{\Omega^\beta}M$ etc., where β is any ordinal $0 \le \beta \le \alpha$ and $z = \Omega^\alpha(f|V)$. By transfinite induction we claim that

> $\hat{N}^u_z$, $\hat{N}^s_z$ extend to continuous Tf invariant subbundles N^u_β, N^s_β of $T_\beta M$ such that $N^u_\beta \subset \hat{N}^u \oplus T_\beta V$, $N^s_\beta \subset T_\beta V \oplus N^s_\beta$, and $T_\beta f$ is eventually normally hyperbolic respecting $N^u_\beta \oplus T_\beta V \oplus N^s_\beta$.

---

*The opposite condition is called "wandering," but the choice of words is unfortunate since there is no etymological reason that a point which wanders might not also wander back where it began. A better choice of words, suggested to us by K. Sigmund, is that a point is called *nostalgic* iff its neighborhoods U keep returning as in the definition of $\Omega(h)$. The point itself may or may not return near by, but its thoughts (nearby points) always do.

Where $\beta = \alpha$ this is vacuous, so suppose it has been proved for some ordinal $\beta \leq \alpha$. There are two cases depending on whether β is a limit ordinal. In either one, we return to the construction of N^u, N^s in (2.3).

Consider L_β where L is the bundle over V whose fiber at p is $L(\hat{N}^u_p, T_pV)$ and L_β is $L|\Omega^\beta$. The natural Tf-action on this bundle was

$$L_p f\colon P \mapsto [C_p + (V_p f)\circ P] \circ (\hat{N}^u_p f)^{-1} \qquad P \in L^u_p$$

where

$$T_p f|\hat{N}^u_p \oplus TV = \begin{bmatrix} \hat{N}^u_p f & 0 \\ C_p & V_p f \end{bmatrix} \quad \text{resp} \quad \hat{N}^u_p \oplus T_pV .$$

Let $L_\beta f$ denote the induced action on the space of sections $\Sigma^b(L_\beta)$. Since $N^u_\beta \subset \hat{N}^u_\beta \oplus T_\beta V$ exists by the induction assumption, there is a unique $L_\beta f$-fixed point: the section $x \mapsto P_x$ where $\text{graph}(P_x) = N^u_x$, $x \in \Omega^\beta$. Besides, for n large, $L_\beta f^n$ contracts all sections toward this one since $N^u_\beta \oplus T_\beta V \oplus N^s_\beta$ exhibits the eventual normal hyperbolicity of f at Ω^β. Thus, there is a neighborhood U of Ω^β in V such that $L_p f^n\colon L_p \to L_p$ is a contraction for all $p \in U$ and all large n.

If β is a limit ordinal then $\Omega^\gamma \subset U$ for some $\gamma < \beta$. Otherwise $\Omega^\beta \neq \bigcap_{\gamma<\beta} \Omega^\gamma$. Thus, $L_\gamma f^n$ contracts $\Sigma^b(L_\gamma)$ for all large n. As in the proof of (2.4), uniqueness of the $L_\gamma f^n$-fixed point implies that it is also an $L_\gamma f$-fixed point. Thus, $T_\gamma f(N^u) = N^u_\gamma$ where $N^u_x = \text{graph}(P_x)$ and $x \mapsto P_x$ is the $L_\gamma f$-fixed point. For a perhaps larger γ', $\gamma \leq \gamma' < \beta$, $\Omega^{\gamma'}$ is very near Ω^β and so, by continuity of N^u_γ it is clear that eventual hyperbolicity of f at Ω^β propagates from Ω^β to $\Omega^{\gamma'}$. This shows that $N^u_{\gamma'}$ is as claimed in the induction hypothesis. Symmetric arguments with f^{-1} produce N^s_γ as claimed.

If β is not a limit ordinal, but $\beta \geq 1$, then there exists an integer N such that no point $x \in \Omega^{\beta-1}$ has more than N f-iterates in $V - U$. (Otherwise a point of Ω^β could be found in $V - U$.) It is now clear that $L_{\beta-1} f^n$ has a unique fixed point. As before this gives a continuous Tf-invariant extension of N^u_β to $N^u_{\beta-1} \subset \hat{N}^u_{\beta-1} \oplus T_{\beta-1}V$, and we verify the inductive hypothesis at stage β-1. This completes the proof of (2.17).

Finally, here is a lemma needed below.

(2.18) *LEMMA. Let*

$$\begin{tikzcd}
0 \arrow[r] & E_1 \arrow[r, "i"] \arrow[d, "T_1"] & E_2 \arrow[r, "j"] \arrow[d, "T_2"] & E_3 \arrow[r] \arrow[d, "T_3"] & 0 \\
0 \arrow[r] & E_1 \arrow[r, "i"] \arrow[d] & E_2 \arrow[r, "j"] \arrow[d] & E_3 \arrow[r] \arrow[d] & 0 \\
 & \Lambda \arrow[r, equal] & \Lambda \arrow[r, equal] & \Lambda &
\end{tikzcd}$$

be a commutative ladder of short exact sequences of Finslered vector bundles, all over the same compact base Λ, *where* T_k *is a bundle map over the base homeomorphism,* $f\colon \Lambda \to \Lambda$, $k = 1,2,3$. *If* T_3 *is invertible and*

$$m(T_3|E_{3x}) > \|T_1|E_{1x}\| \qquad x \in \Lambda$$

then iE_1 *has a unique* T_2*-invariant complement in* E_2.

Proof. Choose any complement to $iE_1 = E_1'$ in E_2, say E_0. (It is only to find E_0 that we use finite dimensionality.) Respecting $E_0 \oplus E_1' = E_2$ we have

$$T_{2x} = \begin{bmatrix} A_x & 0 \\ C_x & K_x \end{bmatrix} .$$

Renorm E_2 to make $j\colon E_0 \to E_3$ and $i\colon E_1 \to E_1'$ isometries. Then $m(T_{3x}) = m(A_x) > \|K_x\| = \|T_{1x}\|$. In the natural way, T_2 acts on the bundle L whose fiber at $x \in \Lambda$ is

$$L_x = L(E_{0x}, E_{1x}') .$$

Namely,

$$\begin{tikzcd}
L \arrow[r, "LT_2"] \arrow[d] & L \arrow[d] \\
\Lambda \arrow[r, "f"] & \Lambda
\end{tikzcd} \qquad LT_2\colon P \mapsto (C_x + K_x P)\circ A_x^{-1} .$$

This action contracts the fibers of L uniformly by the constant

$$\sup_{x \in \Lambda} \left(\|T_{1x}\| m(T_{3x})^{-1}\right) < 1 .$$

Applying (3.1), i.e. [22], we get a unique LT_2-invariant continuous section $\sigma: \Lambda \to L$. There $E_1' \oplus E_3' = E_2$ is a T_2-invariant splitting where

$$E_{3x}' = \text{graph } \sigma(x) \ .$$

Uniqueness of E_3' follows from uniqueness of σ.

§3. The C^r Section Theorem and Lipschitz Jets. The following theorem is the model for the others in this paragraph. See also [22].

(3.1) *THEOREM. Let* E *be a Finslered Banach bundle over the compact space* X *Let the homeomorphism* $h: X \to X$ *be covered by a continuous map* f

$$\begin{array}{ccc} E & \xrightarrow{f} & E \\ \pi\downarrow & & \downarrow\pi \\ X & \xrightarrow{h} & X \end{array}$$

and assume $|f(y) - f(y')| \leq k|y - y'|_x$ *for all pairs* $y, y' \in \pi^{-1}(x)$, $x \in X$, *and a uniform constant* $k < 1$. *Then* E *has a unique bounded section* $\sigma: X \to E$ *such that* $f(\sigma X) = \sigma X$, *and* σ *is continuous. The same conclusions hold when compactness of* X *is replaced by the assumption:* $\{|f(0_x)|: x \in X\}$ *is bounded,* 0_x *being the origin of* $\pi^{-1}(x)$.

In other words,

(3.1') *THEOREM. A fiber contraction has a unique bounded invariant section* σ, *and* σ *is continuous.*

Proof. Let Σ^b be the space of all bounded sections $\sigma: X \to E$ with the metri

$$d(\sigma,\sigma') = \sup_{x \in X} |\sigma(x) - \sigma'(x)|_x .$$

Then Σ^b is a complete metric space and f acts naturally on Σ^b as $f_\#: \Sigma^b \to \Sigma^b$ defined by

$$f_\#: \sigma \longmapsto f \circ \sigma \circ h^{-1} .$$

This means $\text{image}(f_\#\sigma) = f(\text{image } \sigma)$. $f_\#$ is called the *graph transform*. Clearly $d(f_\#\sigma, f_\#\sigma') \leq kd(\sigma,\sigma')$ and so $f_\#$ is a contraction of Σ^b. Thus $f_\#$ has a unique fixed point, say σ_f. But $f_\#(\sigma_f) = \sigma_f$ means $\sigma_f(X)$ is f-invariant and vice versa. The subspace Σ^c of continuous sections is closed in Σ^b and invariant by $f_\#$. Hence σ_f lies in Σ^c. Q.E.D.

Remark. If σ is not required to be bounded, the theorem is false. For example let $X = [0,1]$, $E = [0,1] \times \mathbb{R}$, and $f(x,y) = ((a+1)x - ax^2, by)$ where $0 < a, b < 1$. There are infinitely many unbounded, discontinuous f-invariant sections.

Under certain circumstances the unique f-invariant section will be differentiable. A sufficient condition is given in the following theorem.

(3.2) *THEOREM. Let* E, X, f, h *be as above and also of class* C^r, $r \geq 1$. *(Thus* X *is a* C^r *compact manifold and* h *a* C^r *diffeomorphism.) Let* TX *be given a Finsler structure and call*

$$\alpha = \sup_{x \in X} \|T_x h^{-1}\| .$$

If $k < 1$ *and* $k\alpha^r < 1$ *then* σ_f *is of class* C^r.

The essence of (3.2) is present when $r = 1$. The assumption $k\alpha < 1$ means: f contracts fibers more sharply than h contracts the base.

Natural proofs of theorems like (3.2) are not simple generalizations of the proof of (3.1). For instance, if E is trivial and the space Σ^1 of all C^1 sections $X \to E$ is given the natural C^1 sup-norm, then $f_\#: \Sigma^1 \to \Sigma^1$ is not in general a contraction. It seems unlikely to us that any single metrization of Σ^1 will make $f_\#$ a contraction of Σ^1 for all C^1 fiber contractions, f.

Instead we concentrate on the fixed section σ_f, which we hope to prove is C^1. If it were C^1, the tangent bundle $T(\sigma_f X)$ would be invariant by Tf. Finding a Tf-invariant bundle over $\sigma_f X$ is easy, but proving that it is indeed tangent to $\sigma_f X$ is not. The ideas of Lipschitz jets explained below seem natural for this, and they may have some interest of their own.

Definition of Lipschitz jet. If X, Y are metric spaces, then two local maps g, g' from X to Y defined in a neighborhood of $x \in X$ are *tangent* at x iff

$$gx = g'x \quad \text{and} \quad \limsup_{u \to x} \frac{d(gu,g'u)}{d(u,x)} = 0 .$$

The (*Lipschitz*) *jet* of g at x, $J_x g$, is the equivalence class of all local maps at x, tangent to g at x. The jets of all local maps from X to Y carrying $x \in X$ to $y \in Y$ form the set

$$J(X,x;Y,y) .$$

The local map g is said to represent its jet $J_x g$. For $j, j' \in J(X,x;Y,y)$ we define

$$d(j,j') = \limsup_{u\to x} \frac{d(gu,g'u)}{d(u,x)}$$

for g, g' representing j, j'. This $d(j,j')$ is independent of the particular representatives chosen, although it might equal ∞. When g' is the constant map $u \longmapsto y$ and $j' = J_x g'$ then

$$d(j,j') = \limsup_{u\to x} \frac{d(gu,y)}{d(u,x)} = L_x(g)$$

where $L_x(g)$ is the "Lipschitz constant of g at x."

This definition of Lipschitz jet is the same as the usual definition of 1-jet except that nondifferentiable functions g are permitted. We may distinguish several classes of Lipschitz jets:

$$\mathcal{J}^b = \{j \in J(X,x;Y,y): d(j, \text{constant jet}) < \infty\}$$
$$\mathcal{J}^c = \{j \in \mathcal{J}^b: j \text{ has a continuous representative}\}$$
$$\mathcal{J}^d = \{j \in \mathcal{J}^b: j \text{ has a differentiable representative}\}$$
$$\mathcal{J}^a = \{j \in \mathcal{J}^b: j \text{ has an affine representative}\}$$

For $\mathcal{J}^d$ and $\mathcal{J}^a$ to make sense X, Y must be differentiable manifolds and linear spaces respectively.

(3.3) *THEOREM ON LIPSCHITZ JETS. If* X,Y *are Banach spaces and* $x = 0$, $y = 0$, *then the set of bounded jets* $\mathcal{J}^b$ *is a Banach space with norm* $|j| = d(j,0)$. *The sets* $\mathcal{J}^c$, $\mathcal{J}^d$, $\mathcal{J}^a$ *are closed subspaces of* $\mathcal{J}^b$ *and*

$$\mathcal{J}^b \supsetneqq \mathcal{J}^c \supsetneqq \mathcal{J}^d = \mathcal{J}^a .$$

Proof. $|\cdot| = d(\cdot,0)$ is clearly a norm on $\mathcal{J}^b$ -- we must prove $\mathcal{J}^b$ is complete. Let (j_n) be a Cauchy sequence in $\mathcal{J}^b$ and let g_n represent j_n,

$$g_n: U_n \to Y .$$

Define a sequence $r_n \downarrow 0$ inductively by requiring at the nth stage

$$0 < r_n < r_{n-1} ,$$
$$U_n \supset \{x \in X: |x| \le r_n\} ,$$

$$\max_{m<n} \sup_{|x|\le r_n} \frac{|g_n x - g_m x|}{|x|} \le |j_n - j_m| + \frac{1}{n} .$$

Since $\limsup_{x\to 0} |g_n x - g_m x|/|x| = |j_n - j_m|$, this can be done. Then define

$$g(x) = \begin{cases} g_n(x) & \text{if } r_{n+1} < |x| \le r_n, \quad n = 1,2,\ldots \\ 0 & \text{if } x = 0 . \end{cases}$$

Observe that $J_0 g$ $\mathcal{J}^b$ and $j_m \to J_0 g$ in $\mathcal{J}^b$ since

$$d(j_m, J_0 g) = \limsup_{x\to 0} \frac{|g_m x - gx|}{|x|} \le \limsup_{n\to\infty} \sup_{r_{n+1}\le |x| \le r_n} \frac{|g_m x - g_n x|}{|x|}$$
$$\le \sup_{n>m} \left(|j_n - j_m| + \frac{1}{n}\right)$$

which tends to zero as $m \to \infty$. Hence $\mathcal{J}^b$ is complete.

For $\mathcal{J}^c$ we must construct g with greater care: the g above would probably *not* be continuous.

Let (j_n), (g_n), (r_n) be as above with $j_n \in \mathcal{J}^c$ and g_n continuous. Define a sequence of continuous functions $\phi_n : X \to [0,1]$ such that

$$\phi_n x = \begin{cases} 1 & \text{if } |x| \le r_{n+1} \\ 0 & \text{if } |x| \ge r_n . \end{cases}$$

Then put $g = \phi_n g_n + (1 - \phi_n) g_{n-1}$ on the annulus $r_{n+1} < |x| \le r_n$. At $|x| = r_{n+1}$, g is continuous because its limit is g_n from above and below. Again $j_m \to J_0(g)$ because

$$d(j_m, J_0 g) = \limsup_{x\to 0} \frac{|g_m x - gx|}{|x|} = \limsup_{n\to\infty} \sup_{r_{n+1}<|x|\le r_n} \frac{|gx - g_m x|}{|x|}$$
$$= \limsup_{n\to\infty} \sup_{r_{n+1}<|x|\le r_n} \frac{\phi_n(x)[g_n x - g_m x] + (1-\phi_n x)[g_{n-1} x - g_m x]}{|x|}$$
$$\le \limsup_{n\to\infty} |j_n - j_m| + |j_{n-1} - j_m| + \frac{1}{n} + \frac{1}{n-1}$$

which tends to zero as $m \to \infty$. Hence $\mathcal{J}^c$ is closed in $\mathcal{J}^b$.

Now let j belong to $\mathcal{J}^d$. That j has a differentiable representative, say g, means that $(Dg)_0$ is tangent to g at 0 -- i.e. $(Dg)_0$ is another representative of j. Thus, $\mathcal{J}^d = \mathcal{J}^a$. Likewise, if (j_n) is a sequence in $\mathcal{J}^d$ convergent in $\mathcal{J}^b$ and g_n is a differentiable representative of j_n then $((Dg_n)_0)$ is a Cauchy sequence in $L(X,Y)$. Since $L(X,Y)$ is complete, this proves $\mathcal{J}^d$ is closed in $\mathcal{J}^b$.

To see that $\mathcal{J}^b \supsetneqq \mathcal{J}^c$, define $g: \mathbb{R} \to \mathbb{R}$ as $g(x) = |x|\chi_{\mathbb{Q}}(x)$ where $\chi_{\mathbb{Q}}$ is the characteristic function of the rationals. Then $J_0 g$ is bounded -- $d(J_0 g, 0) = 1$ -- but it is easy to see that no continuous g' can represent $J_0 g$. To see that $\mathcal{J}^c \supsetneqq \mathcal{J}^d$ consider $x \longmapsto |x|$. Q.E.D.

It is interesting to note that $\mathcal{J}^b$ is nonseparable. We find it useful to think of $\mathcal{J}^b$ as an enlarged class of tangents -- larger than the class of linear maps and perhaps more natural a priori.

To get a grip on the space of sections of a Banach bundle we need to understand a section's *slope*. When E is trivial this is easy. Any section $\sigma: X \to X \times Y$ is of the form

$$\sigma(x) = (x, s(x)) \qquad s: X \to Y$$

where Y is the fiber of E. This lets us put

$$\text{slope}_x(\sigma) = L_x(s) = \limsup_{u \to x} \frac{|s(u) - s(x)|_x}{d_X(u,x)}$$

where $|\ |_x$ is the norm on the fiber of E over x. When E is not trivial, we can trivialize it.

(3.4) *LEMMA. Any* C^r *finite dimensional, Finslered vector bundle* E *can be isometrically* C^r *embedded in a trivial finite dimensional, Finslered* C^r *vector bundle* $\tilde{E}$.

Proof. That a complementary E' exists, $E \oplus E'$ being trivial, is standard [6]. Any Finsler on E' and the direct sum Finsler on $\tilde{E}$ finish the proof. See also (6.4).

Remark 1. Another way to deal with slope is to introduce a connection -- a notion of horizontal subspace in TE. Trivialization accomplishes the same thing. Neither is uniquely determined by E.

Remark 2. If E has a Riemann structure then it is also possible to isometrically embed E in a bundle $\tilde{E}$ which is trivial and has the constant Riemann structure. (For Finslers this is not always possible.) One might then redefine slope by the usual global inequality $|sx - sy| \leq cd_X(x,y)$. Since the latter gets into questions of the global nature of X and d_X, we avoid it, preferring to leave $\tilde{E}$ just vectorically trivial. See also Lemma 6.8.

In §§4, 5, 6 we need hypotheses more general than those in (3.1,2). For instance, many natural "fiber contractions" do not cover homeomorphisms of the base onto itself, but rather onto some larger set.

Definition. Let $X_0 \subset X$ be a subspace. If $h: X_0 \to X$ is a homeomorphism to its image and $h(X_0) \supset X_0$ then h is said to *overflow* X_0.

Definition. A *fiber contraction* is a fiber preserving map of Finslered Banach bundles

$$\begin{array}{ccc} E_0 & \xrightarrow{f} & E \\ \downarrow & & \downarrow \\ X_0 & \xrightarrow{h} & X \end{array}$$

such that $E_0 = E|X_0$, f is continuous, $\sup_{x \in X_0} L(f|E_x) < 1$, and h overflows X_0.

Note that a fiber contraction f acts on sections of E_0 in the same natural way as before:

$$f_\# \sigma(x) = f\sigma h^{-1}(x) \qquad (x \in X_0)$$

for any section $\sigma: X_0 \to E_0$. Thus $f_\#: \Sigma(E_0) \to \Sigma(E_0)$. When X_0 is compact, $\Sigma^c(E_0$ is metrizable and is contracted into itself by $f_\#$. Thus, as in (3.1), $f_\#$ has unique fixed point $\sigma_f \in \Sigma^c(E_0)$. This σ_f is the unique continuous (or bounded) section $\sigma: X_0 \to E_0$ such that

$$f(\text{image}(\sigma)) \cap E_0 = \text{image}(\sigma) \ .$$

It is an easy abuse of language to call σ_f the f-invariant section.

Definition. A fiber contraction f is of *sharpness* r, $r \geq 0$, if X_0, X, f, h^{-1} are C^r and if

$$\sup_{x \in X_0} k_x \alpha_x^r < 1$$

where $k_x = L(f|E_x)$, $\alpha_x = \|T_{hx}h^{-1}\|$. (This assumes TX to have been Finslered.) Such an f is an *r-fiber contraction.*

(3.5) C^r *SECTION THEOREM. Let* f *be an* r*-fiber contraction,* $r \geq 0$*; let* X_0 *be compact, and let* E *be finite dimensional. Then the unique* f*-invariant section* $\sigma_f: X_0 \to E_0$ *is* C^r*, depends* C^r *continuously on* f*, and uniformly* C^r *attracts all other* C^r *sections of* E_0 *under repeated application of* $f_\#$*. That is, if* $f': E_0 \to E$ *is an* r*-fiber contraction and* $f' \to f$, C^r*, then* $\sigma_{f'} \to \sigma_f$, C^r*; and* $f_\#^n(\sigma) \to \sigma_f$, C^r*, for all* σ *in any* C^r *bounded set of* C^r *sections of* E_0.

Proof. Let $r = 0$. Since f contracts all fibers uniformly, σ_f exists and is continuous as noted above. Likewise, it is clear that $|f_\#^n\sigma - \sigma_f|_0 \leq k^n|\sigma - \sigma_f|_0$ where $k = \sup L(f|E_x) < 1$. Thus, σ_f is a uniformly C^0-attractive fixed point. Since σ_f is continuous and X_0 is compact, a large disc bundle $D_0 \subset E_0$ is carried into $\mathrm{Int}(D)$ by f; $D_0 = D|X_0$. Also it is clear that

$$\sigma_f X_0 = \bigcap_{n\geq 0} f^n D_0 \overset{\text{def.}}{=} \{z \in D_0 : \exists z' \text{ with } z', \ldots, f^n z' = z \in D_0\} .$$

Let U be any neighborhood of $\sigma_f X_0$. There exists an n so large that $f^n(D_0) \subset \mathrm{Int}(U)$. If f' is a fiber contraction sufficiently C^0 close to f it is clear that $f'^n(D_0) \subset U$ also. Thus $\sigma_{f'}(X_0) \subset U$ and so $\sigma_{f'} \to \sigma_f$, C^0, as $f' \to f$, C^0. This completes the proof of (3.5) where $r = 0$.

Now let r be ≥ 1. Before we can show σ_f is C^1, we must prove it is Lipschitz. To do so, we need to use the fact that f is C^1. (Otherwise, the estimates $\sup k_x < 1$ and $\sup k_x\alpha_x^r < 1$ do not imply σ_f is smooth: for instance, let $E = [0,1]\times\mathbb{R}$ and let $f(x,y) = (x, g(x) + \frac{1}{2}(g(x)-x))$ where $g: [0,1] \to \mathbb{R}$ is an continuous, non-Lipschitz function; then $k_x = \frac{1}{2}$, $\alpha_x = 1$, and $\sigma_f = g$.)

By (3.4), E can be trivialized

$$\tilde{E} = E \oplus E' .$$

Then f extends to $\tilde{f}$ on $\tilde{E}$ by setting

$$\tilde{f}(v \oplus v') = f(v) \oplus 0 .$$

Clearly $\tilde{f}$ obeys the same hypotheses as did f and the $\tilde{f}$-invariant section of $\tilde{E}$ lies in $E \oplus 0$. Thus it is no loss of generality to assume E is trivial in the

first place.

Since σ_f is continuous and X_0 is compact, there is some disc subbundle $D_0 \subset E_0$ of large radius such that $E_0 \cap fD_0 \subset D_0$. Since E is finite dimensional, D_0 is compact.

Using the triviality of E, we can, at each point $z \in D_0$, express $T_z f$ as

$$T_z f = \begin{bmatrix} A_z & B_z \\ C_z & K_z \end{bmatrix}, \qquad \begin{matrix} A_z\colon T_x X \to T_{hx} X & B_z\colon E_x \to T_{hx} X \\ C_z\colon T_x X \to E_{hx} & K_z\colon T_x X \to T_{hx} X \end{matrix}$$

where $x = \pi z$. Since f preserves fibers, $B_z \equiv 0$. By assumption $\|K_z\| \le k_x < 1$ and $A_z = T_x h$ has $\|A_z^{-1}\| \le \alpha_x$. From our estimates on k, α it follows that Tf carries a family of nonvertical cones into itself. Namely, choose

$$\ell > \frac{c\alpha}{1-\tau} \qquad \begin{aligned} c &= \sup_{D_0} \|C_z\| \\ \alpha &= \sup_{D_0} \alpha_x \\ \tau &= \sup k_x \alpha_x \end{aligned}$$

and consider in each $T_z E$ the cone of all vectors of slope $\le \ell$:

$$\mathrm{Cone}_z(\ell) = \{u + v\colon u \in T_x X,\ v \in E_x,\ |v| \le \ell |u|\} .$$

Such a vector $u + v$ is transformed by $T_z f$ into another, $u' + v'$, such that

$$\begin{aligned} |u'| &\ge \alpha_x^{-1} |u| \\ |v'| &\le k_x |v| + \|C_z\| |u| \end{aligned}$$

and thus,

$$\begin{aligned} |v'| &\le k_x \ell |u| + c|u| \le (k_x \alpha_x \ell + c\alpha_x)|u'| \\ &\le (\tau\ell + c\alpha)|u'| \end{aligned}$$

which by choice of ℓ is $\le \ell |u'|$. Consequently

$$(1) \qquad T_z f(\mathrm{Cone}_z(\ell)) \subset \mathrm{Cone}_{fz}(\ell) .$$

Now let us look at the set $\Sigma(\ell)$ of all continuous sections $\sigma\colon X_0 \to D_0$ such that at each point $x \in X_0$

$$\text{slope}_x(\sigma) \le \ell .$$

From (1) it is immediate that $f_\#$ carries $\Sigma(\ell)$ into itself. We claim that $\Sigma(\ell)$ is closed in Σ and hence that the invariant section σ_f lies in $\Sigma(\ell)$. When E has a constant (= trivial) Finsler, this is merely a restatement of the fact that the set of maps from X to Y with Lipschitz instant $\le \ell$ is closed in $C^0(X,Y)$. When E has a general Finsler and $\{\sigma_n\}$ is a sequence in $\Sigma(\ell)$ which converges to σ in Σ then we must show $\sigma \in \Sigma(\ell)$. Fix $x_0 \in X_0$ and any $\varepsilon > 0$. Since $|\ |_x$ is continuous in $x \in X$ (this is a feature of a Finsler), there is a neighborhood U_0 of x_0 in X such that

$$1-\varepsilon \le \frac{|v|_x}{|v|_{x_0}} \le 1+\varepsilon \qquad x \in U_0 \qquad 0 \ne v \in E_{x_0} .$$

Thus, relative to the constant Finsler $|\ |_{x_0}$ on $E|U_0$, the sections $\sigma_n|U_0$ have slope $\le \ell+\varepsilon\ell$, and so their uniform limit, $\sigma|U_0$, also has slope $\le \ell+\varepsilon\ell$ relative to the constant Finsler $|\ |_{x_0}$. Thus, $\text{slope}_{x_0}(\sigma) \le \ell+\varepsilon\ell$. As ε was arbitrary, we have $\text{slope}_{x_0}(\sigma) \le \ell$ and hence have proved $\Sigma(\ell)$ is complete. Therefore σ_f, the invariant section, is Lipschitz and has slope $\le \ell$.

We are going to cook up a Banach bundle $\mathcal{J}$ and apply (3.1). Its fixed section will furnish $T(\sigma_f)$. For each $x \in hX_0$ let

$$\mathcal{J}_x = \{J_x(\sigma)\colon \sigma\in\Sigma \text{ and } \sigma(x)=\sigma_f(x) \text{ and } |J_x(\sigma)|<\infty\} .$$

(When $x \in h(X_0)-X_0$ we put $\sigma(x) = f(\sigma_f(h^{-1}x))$.) Thus $\mathcal{J}_x \subset J(X,x;E,\sigma_f(x))$. Using the constant jet $J_x(u \mapsto \sigma_f(x))$ as the origin, $\mathcal{J}_x$ has a natural Banach space structure via (3.3) but, as was pointed out to us by Ethan Akin, $\mathcal{J} = \cup\mathcal{J}_x$ is *not* naturally a Banach bundle. The natural topology one would give to $\mathcal{J}$ using some trivializing E-chart *depends* on the chart -- even when E is trivial, $\sigma_f \equiv 0$ and $X = [0,1]$. To get around this problem we put the discrete topology on X, denoting the result by X^{discrete}. Then $\mathcal{J}$ is a Banach bundle over X^{discrete} (although in a rather foolish way) and f naturally induces a map

$$\begin{tikzcd} \mathcal{J}_0 \arrow[r, "\mathcal{J}f"] \arrow[d] & \mathcal{J} \arrow[d] \\ X_0^{\text{discrete}} \arrow[r] & hX_0^{\text{discrete}} \end{tikzcd} \qquad \begin{aligned} \mathcal{J}f(J_x\sigma) &= J_{hx}(f_\#\sigma) \\ &= J_{hx}(f\sigma h^{-1}) \end{aligned}$$

We claim that $\mathcal{J}f$ contracts the fiber $\mathcal{J}_x$ by the factor $\tau_x = k_x\alpha_x$. If

$j, j' \in \mathcal{J}_x$ are represented by σ, σ' then

$$|\mathcal{J}f(j)-\mathcal{J}f(j')| = |J_{hx}(f\sigma h^{-1})-J_{hx}(f\sigma' h^{-1})| = \limsup_{u\to hx} \frac{|f\sigma h^{-1}(u)-f\sigma' h^{-1}(u)|_{hx}}{d_X(u,hx)}$$

$$\leq \limsup_{u'\to x} \frac{|f\sigma(u')-f\sigma'(u')|_{hx}}{d_X(u',x)} \cdot \limsup_{u\to hx} \frac{d_X(h^{-1}u,x)}{d_X(u,hx)}$$

$$\leq k_x|j-j'| \cdot \alpha_x \leq \tau_x|j-j'| \ .$$

Therefore, applying (3.1), $\mathcal{J}$ has a unique $\mathcal{J}f$-invariant section, say $\sigma_{\mathcal{J}f}: X_0 \to \mathcal{J}$. Clearly $\mathcal{J}f$ carries $\mathcal{J}^d$ into itself, $\mathcal{J}^d$ being $\{j \in \mathcal{J}: j$ is representable by a differentiable section$\}$. For

$$f\sigma h^{-1}$$

is differentiable whenever σ is. Since $\mathcal{J}^d$ is closed in $\mathcal{J}$ by (3.3) the $\mathcal{J}f$ invariant section $\sigma_{\mathcal{J}f}$ takes on its values entirely in $\mathcal{J}^d$.

There is another $\mathcal{J}f$-invariant section of $\mathcal{J}$, namely

$$x \mapsto J_x(\sigma_f) \ .$$

It is invariant because σ_f is $f_\#$-invariant. Hence

$$J_x(\sigma_f) = \sigma_{\mathcal{J}f}(x) \ .$$

This proves that: at each $x \in X_0$, the jet of σ_f is representable by a differentiable section. Hence σ_f is everywhere differentiable (a function tangent to a differentiable function at x is differentiable at x). Besides, its derivative is uniformly bounded. It remains to prove that σ_f is C^1. Consider still another bundle over X. Its fiber at x is

$$\mathcal{L}_x = L(T_xX,E_x) \qquad \mathcal{L} = \cup\mathcal{L}_x \ .$$

Tf acts on $\mathcal{L}_x$ according to

$$\mathcal{L}f: P \mapsto (C_{\sigma_f x} + K_{\sigma_f x}P) \circ A_{\sigma_f hx}^{-1} \qquad x \in X_0 \ .$$

(If graph (P) denotes the plane $\{u + Pu: u \in T_xX\} \subset T_{\sigma_f x}E$ then Tf graph (P) = graph $(\mathcal{L}f(P))$ and in this sense $\mathcal{L}f$ is the natural action of Tf on prospective

tangent planes to image σ_f.) The fiber L_x has a natural Finsler and is finite dimensional. The induced map Lf contracts the fiber L_x by the constant $\tau_x = k_x\alpha_x$. Since σ_f is continuous and f is C^1, Lf is a continuous fiber contraction. By (3.1), its unique bounded invariant section, say σ_{Lf}, is continuous. The section of L furnishing the tangent planes to image (σ_f) is certainly Lf-invariant since image (σ_f) is invariant under the C^1 map f. Since the derivative of σ_f is uniformly bounded, σ is bounded. Hence, $\sigma = \sigma_{Lf}$, i.e., σ_f is C^1.

Remark. From conversations with R. Kirby, it seems to be the case that *any* σ with $J_x(\sigma)$ a continuous function of x is *necessarily* of class C^1. This is a strange feature of the topology of J.

To prove that σ_f is of class C^r is a fairly easy induction. The case $r = 1$ is hard but finished, so assume $r \geq 2$. Consider again the induced map

$$\begin{array}{ccc} L_0 & \xrightarrow{Lf} & L \\ \downarrow & & \downarrow \\ X_0 & \xrightarrow{h} & hX \end{array}$$

By induction, σ_f is C^{r-1} and so Lf is C^{r-1}. It contracts the fiber L_x by the constant $\tau_x = k_x\alpha_x$ and so it satisfies the C^{r-1} hypotheses of (3.5). Hence σ_{Lf} is C^{r-1} by induction. Since σ_{Lf} amounts to the tangent bundle of image (σ_f) parameterized by X, we see that σ_f is C^r.

Next, we must discuss how σ_f varies as a function of f. Let f' cover h', $h'X_0 \supset X_0$ where f' and h' tend to f and h in the C^r sense, $r \geq 1$. Clearly $\sigma_{f'}$ exists and is unique. We must prove that $\sigma_{f'}$ tends to σ_f in the C^r sense. By induction, assume that σ_f converges to $\sigma_{f'}$ in the C^{r-1} sense, $r \geq 1$ and that f' is tending to f in the C^r sense. The tangent bundle of image $(\sigma_{f'})$ was found as the Lf' invariant section of a certain bundle L' which is the same bundle wherein image (σ_f)'s tangent bundle was found. And clearly Lf' tends to Lf in the C^{r-1} sense. Thus by induction applied to Lf' and Lf, $\sigma_{Lf'}$ tends to σ_{Lf} in the C^{r-1} sense, i.e. $\sigma_{f'}$ tends to σ_f in the C^r sense.

Finally, we must see that σ_f is uniformly C^r attractive under $f^n_\#$, $r \geq 1$. By induction we know that $(Lf)^n_\#\sigma \rightrightarrows \sigma_{Lf}$ in the C^{r-1} sense as $n \to \infty$. Thus,

$$T(\text{image } (f^n_\#\sigma)) \rightrightarrows T(\sigma_f) \quad C^{r-1}$$

and so $f^n_\#\sigma \rightrightarrows \sigma_f$, C^r, as $n \to \infty$. This completes the proof of (3.5).

Remark. Instead of being defined on the whole bundle E_0, it would have sufficed throughout §3 for f to map D_0 into D where D was a disc subbundle of E and D_0 its restriction to X_0.

To verify the overflowing condition is not always easy. Here is a sufficient condition:

(3.6) *PROPOSITION. Suppose* X *is a* C^1 *compact manifold,* V *is a compact* C^1 *submanifold of* X *without boundary, and* X_1 *is a compact neighborhood of* V *in* X. *If* $h: X_1 \to X$ *is normally expanding at* V, *then* V *has a compact neighborhood* $X_0 \subset X_1$ *such that* $hX_0 \supset X_0$.

In §§4,5,6 we will need a stronger version of (3.6): it must give a uniform X_0 for a whole class of h's. For this we need the following form of the Inverse Function Theorem.

(3.7) *LEMMA. If* $A: E \to E'$ *is an isomorphism of Banach spaces and* $r: U \to E'$ *is a Lipschitz map having* $L(r) < m(A)$ *and if* U *is convex in* E *then* $h = A + r$ *is injective. If* $E = E_1 \oplus E_2$, $E' = E_1' \oplus E_2'$, $A = A_1 \oplus A_2$, $U \supset E_1(\delta) \oplus E_2(\delta)$ *then*

$$h(U) \supset E_1'(\delta_1') \oplus E_2'(\delta_2')$$

$$\delta_i' = \big(m(A_i) - 2L(r)\big)\delta \qquad i = 1, 2 .$$

Moreover, h^{-1} *is Lipschitz with pointwise Lipschitz constant* $\leq \big(m(A) - L(r)\big)^{-1}$.

Proof. Since we do not assume E has the product norm, the factor of 2 occurs The proof is standard, see [12] or [31]. See also the figure below.

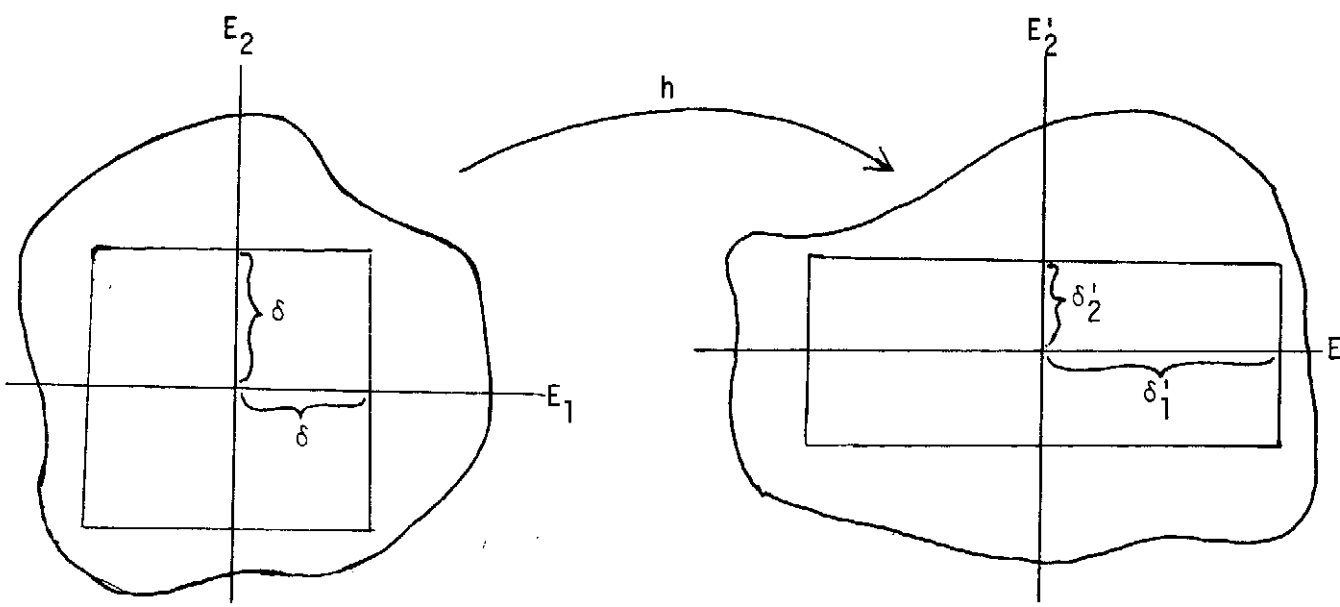

We conclude this section by showing that the unique invariant section of (3.1) often satisfies a Hölder condition. This makes sense only if the total space E has a metric. For simplicity we assume that E has a metric induced by a complemented inclusion of E into a trivial bundle

$$E \hookrightarrow E \oplus E' \approx X \times Y$$

where Y is a Banach space, $X \times Y$ has the product metric, and the natural projection $\mathrm{proj}: E \oplus E' \to E$ is Lipschitz. Such a metric on E is called *trivializable*. Note that such a trivializable metric coincides on fibers with a Finsler on E.

The following theorem was stated incorrectly in 6.1(b) of [22]. (The hypothesis that F is Lipschitz should be added.)

(3.8) *HÖLDER SECTION THEOREM. Let* $\pi: E \to X$ *be a Finslered Banach bundle over the compact metric space* X. *Assume that the Finsler is induced by a trivializable metric on* E. *Let* $f: E \to E$ *be a fiber map covering the homeomorphism* $h: X \to X$. *Let* $0 < k < 1$ *be such that*

$$|f(y) - f(y')|_{fx} \leq k|y - y'|_x$$

whenever $x \in X$ *and* $y, y' \in E_x$. *Suppose further that* f *and* h^{-1} *are Lipschitz and the Lipschitz constant* α *of* h^{-1} *satisfies*

$$k\alpha^b < 1 \qquad 0 < b \leq 1 .$$

Then the unique f*-invariant section* σ_f *is* b*-Hölder.*

Proof. Extend f to $X \times Y$ by commutativity of

$$\begin{array}{ccccc} X \times Y & & \xrightarrow{\quad \bar{f} \quad} & & X \times Y \\ \wr\wr & & & & \wr\wr \\ E \oplus E' & \xrightarrow{\mathrm{proj}} & E & \xrightarrow{f} & E \hookrightarrow E \oplus E' \end{array}$$

This $\bar{f}$ satisfies the same hypotheses as f, so we may assume $E = X \times Y$ with the metric

$$d\big((x,y),(x',y')\big) = \max\big(d_X(x,x'), |y-y'|\big) .$$

A section of $X \times Y$ corresponds to a map $X \to Y$. Hölder sections correspond to

Hölder maps. An f-invariant section corresponds to a map $g: X \to Y$ such that $g = fgh^{-1}$.

Let $\mathcal{H}(H,b) = \{g \in C^0(X,Y): \limsup_{|x-y|\to 0} \frac{g(x)-g(y)}{|x-y|^b} \leq H\}$ where $H > 0$ and $0 < b < 1$ are constants. For clarity we write the metric on X as $|x-y|$.

Compactness of X implies that any map in $\mathcal{H}(H,b)$ satisfies a b-Hölder condition.

It is easy to see that $\mathcal{H}(H,b)$ is closed in the Banach space $C^0(X,Y)$. We shall show that for some H and b, $\mathcal{H}(H,b)$ is invariant under the graph transform $f_\#: g \mapsto fgh^{-1}$. Hence the fixed points of $f_\#$, σ_f, lies in $\mathcal{H}(H,b)$.

Let L be a Lipschitz constant of f. Let $x, x' \in X$ and call $p = h^{-1}(x)$, $p' = h^{-1}(x')$. Let $g \in \mathcal{H}(H,b)$. Then

$$\begin{aligned}
|f_\#(g)x - f_\#(g)x'| &= |f(p,gp) - f(p',gp')| \\
&\leq |f(p,gp) - f(p',gp)| + |f(p',gp) - f(p',gp')| \\
&\leq L|p-p'| + k|gp - gp'| \\
&\leq L\alpha|x-x'| + kH|p-p'|^b \\
&\leq L\alpha|x-x'| + kH\alpha^b|x-x'|^b \\
&= |x-x'|^b(L\alpha|x-x'|^{1-b} + Hk\alpha^b) .
\end{aligned}$$

Now $k\alpha^b < 1$ and $1 - b > 0$. Therefore if $|x - x'|$ is sufficiently small, the factor in parenthesis in the last equation will be $< H$. This shows that $f_\# g \in \mathcal{H}(H,b)$, i.e. that $f_\#: \mathcal{H}(H,b) \circlearrowleft$, and completes the proof of (3.8).

Remark 1. The proof of (3.8) is easily adapted to maps defined only on a ball subbundle of E or over a noncompact base space. Also, the absolute assumption $k\alpha^b < 1$ could be replaced by a relative one $\sup_x k_x\alpha_x^b < 1$.

Remark 2. The C^r Section Theorem and the Hölder Section Theorem can be combined to show that if in (3.2) it is assumed that $k\alpha^{r+b} < 1$, $0 < b \leq 1$, then the f-invariant section, σ_f, is C^r and its r-th derivative is b-Hölder.

§4. The Local Theory of Normally Hyperbolic, Invariant, Compact Manifolds.

In this section the basic theorem of our paper is proved.

(4.1) *THEOREM. Let* $f: M \to M$ *be a* C^r *diffeomorphism,* $r \geq 1$, *of the compact* C^∞ *manifold* M *leaving the compact* C^1 *submanifold* $V \subset M$ *invariant. Assume* f *is* r*-normally hyperbolic at* V *respecting* $T_V M = N^u \oplus TV \oplus N^s$. *Then*

(a) *Existence: There exist locally* f*-invariant submanifolds* $W^u(f)$ *and* $W^s(f)$ *tangent at* V *to* $N^u \oplus TV$, $TV \oplus N^s$.

(b) *Uniqueness: Any locally invariant set near* V *lies in* $W^u \cup W^s$.

(c) *Characterization:* W^s *consists of all points whose forward* f *orbits never stray far from* V *and* W^u *of all points whose reverse* f*-orbits never stray far from* V.

(d) *Smoothness:* W^u, W^s *and* V *are of class* C^r.

(e) *Lamination:* W^u *and* W^s *are invariantly fibered by* C^r *submanifolds* W^{uu}_p, W^{ss}_p, $p \in V$, *tangent at* V *to* N^u_p, N^s_p *respectively. Points of* W^{ss}_p *are characterized by sharp forward asymptoticity and points of* W^{uu}_p *by sharp backward asymptoticity.*

(f) *Permanence: If* f' *is another* C^r *diffeomorphism of* M *and* f' *is* C^r *near* f, *then* f' *is* r*-normally hyperbolic at some unique* V', C^r *near* V. *The manifolds* $W^u(f')$, $W^s(f')$, *and the laminae* $W^{uu}_{p'}(f')$, $W^{ss}_{p'}(f')$ *are* C^r *near those of* f.

(g) *Linearization: Near* V, f *is topologically conjugate to* $Nf = Tf|(N^u \oplus N^s)$.

(h) *Flows and Eventuality: Similarly for eventually* r*-normally hyperbolic diffeomorphisms and flows.*

Remarks. The local invariance of W^u, W^s means $fW^u \supset W^u$, $fW^s \subset W^s$. (b) follows from (g). (g) was proved in [41]. A C^r lamination is a foliation F whose leaves F_x are C^r and $\bigcup_x T^k_x F_x$ is a continuous bundle, $1 \leq k \leq r$ (where T^k denotes the k'th order tangent). For instance the unstable manifolds of a C^r Anosov diffeomorphism form a C^r lamination. In the case of flows, invariance means invariance under all time-t maps.

Proof. First we shall construct W^u, the local unstable manifold through V. This is the hardest part of (4.1). Essentially our idea is to consider the germ of f at V as the perturbation of a fiber map satisfying (3.5). The smoothing techniques are special to the compact case.

By the Whitney Extension Theorem [1] there is a C^1 diffeomorphism $g: M \to M$ such that gV, $Tg(N^u)$, $Tg(N^s)$ are C^∞. The map gfg^{-1} is normally hyperbolic at gV. So it is no loss of generality to assume V, N^u, N^s are C^∞ -- at least for purposes of finding W^u of class C^1 and proving that $W^u(f')$ depends C^1

continuously on f' C^1 near f. For $g^{-1}(W^u(gfg^{-1}))$ will serve as $W^u(f)$. The C^r results, $r \geq 2$, will need more proof.

By definition, there exists a C^∞ Riemann structure R_0 on TM exhibiting the normal hyperbolicity of f at V. Since N^u, TV, N^s are C^∞, we may define a new Riemann structure on T_VM by declaring N^u, TV, N^s to be orthogonal but otherwise equal to R_0. Then we smoothly extend to TM. The new Riemann structure R will still exhibit the normal hyperbolicity of f at V. Let exp be the exponential of R and set $X = \exp N^u(\varepsilon_0)$ where ε_0 is small enough to make X a compact manifold (with boundary). Clearly $T_VX = N^u \oplus TV$.

Let E be a C^∞ extension of N^s to X near V. Exponentiating E gives a tubular neighborhood of X in M, $t\colon E(\nu) \to M$. The map $t^{-1}ft$, defined near V in E, is normally hyperbolic at V, and it may replace f in our search for W^u -- i.e. we may and do assume $M = E$. As in (3.5) we can assume E is trivial by setting $f(y \oplus y') = f(y)$ for $y \oplus y' \in E \oplus E'$, E' being a C^∞ bundle over X such that $E \oplus E'$ is trivial. This makes $T_pf|E_p$ non-invertible but keeps $\|T_pf|E_p\| = \|T_pf|N_p^s\|$. We call Y the fiber of E and π the projection $\pi\colon X \times Y \to X$. Respecting $E = X \times Y$ we write $Tf = \begin{bmatrix} A & B \\ C & K \end{bmatrix}$ which at $p \in V$ becomes

$$T_pf = \begin{bmatrix} A_p & B_p \\ C_p & K_p \end{bmatrix} = \begin{bmatrix} N_p^uf \oplus V_pf & 0 \\ 0 & N_p^sf \end{bmatrix} .$$

Let

$$X(\varepsilon) = \exp N^u(\varepsilon)$$

and let

$$\Sigma_0(1,\varepsilon) = \{\text{sections } X(\varepsilon) \to E(\varepsilon)\colon \sigma(p) = p \ \forall p \in V, \text{ slope } \sigma \leq 1\} .$$

Put the C^0 sup norm on $\Sigma_0(1,\varepsilon)$, which makes it complete as in §3. (Since E is trivial, the slope is well defined.) We claim f naturally induces a contraction $f_\#$ of $\Sigma_0(1,\varepsilon)$ -- at least for small ε -- defined by

$$f_\#\sigma = f \circ \sigma \circ g$$

where g is a right inverse of $\pi f \sigma$ defined on $X(\varepsilon)$. The hard part is to show $f_\#$ is well defined.

The Riemann structure R on TM, restricted to TX and TV, gives exponential maps $X\text{-exp}: TX \to X$, $V\text{-exp}: TV \to V$. Then, consider $\chi_p: T_pX \to X$ defined by

$$\chi_p(\gamma + v) = X\text{-exp}(\gamma + h_p(v) + v) \qquad \gamma \in N_p^u \quad v \in T_pV$$

where $h_p: T_pV \to N_p^u$ has $X\text{-exp}(h_p(v) + v) = V\text{-exp}_p(v)$. Thus, h is C^∞ and $(Dh_p)_p = 0$. (We have merely modified the natural exponential charts so that V appears to be flat.) Triviality of E lets us define bundle charts e_p

$$\begin{aligned} T_pX \times Y &\xrightarrow{e_p} X \times Y = E \\ (\xi, y) &\longmapsto (\chi_p(\xi), y) \end{aligned}$$

Four uniformities are to be noted about E and these charts:

$$\text{(i)} \qquad \frac{|y|_x}{|y|_{x'}} \rightrightarrows 1 \qquad \frac{d_X(x,x')}{|\chi_p^{-1}(x) - \chi_p^{-1}(x')|_p} \rightrightarrows 1$$

for $x, x' \in X$, $p \in V$, $y \in Y$, $y \neq 0$, and $d_X(p,x) + d(x,x') \rightrightarrows 0$. By $\rightrightarrows$ we mean uniform convergence. Second, if f is expressed in e_p-charts as

$$f_p = e_{fp}^{-1} \circ f \circ e_p = T_pf + r_p: T_pX \times Y \to T_{fp}X \times Y$$

then

$$\text{(ii)} \qquad D(r_p | T_pM(\nu)) \rightrightarrows 0 \quad \text{as} \quad \nu \to 0 \qquad p \in V .$$

(ii) says the Taylor approximation of f_p by T_pf is uniformly good. The uniformities (i), (ii) follow at once from compactness of V, M, and smoothness of h, exp. Finally, given constants $\omega < \omega' < 1$ there exists $\delta > 0$ such that

$$\text{(iii)} \qquad X(\varepsilon) \supset X_p(\omega'\varepsilon, \delta) \overset{\text{def}}{=} \chi_p(N_p^u(\omega'\varepsilon) \times T_pV(\delta))$$

$$\text{(iv)} \qquad \chi_p^{-1}(X_{p'}(\omega\varepsilon, \omega\varepsilon)) \subset N_p^u(\omega'\varepsilon) \times T_pV(\delta)$$

whenever $p, p' \in V$, $\chi_p^{-1}(p') \in T_pV(\delta/2)$, and ε is small. See the figure below, drawn in the χ_p-chart.

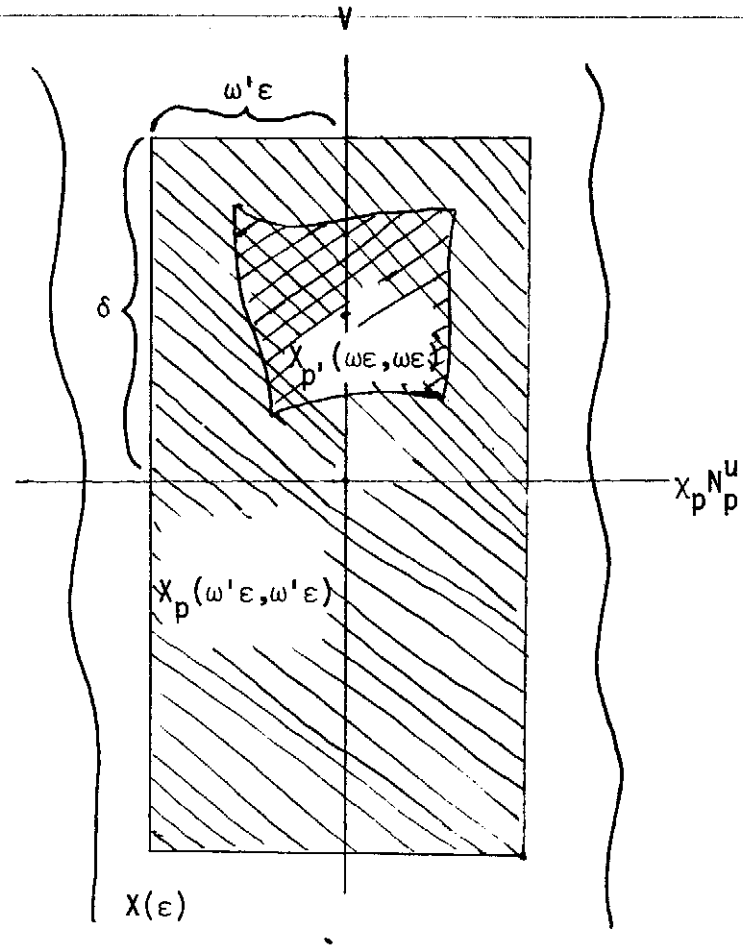

Here is how (iii) is proved. Let p' be a point of V near $p \in V$. Then $\chi_{p'}N^u_{p'}(\varepsilon)$ is part of $X(\varepsilon)$ and $\chi_p^{-1}\chi_{p'}N^u_{p'}$ is a disc in T_pX through the point $\chi_p^{-1}(p') \in T_pV$. As $p' \to p$, the tangent bundle of $\chi_p^{-1}\chi_{p'}N^u_{p'}$ converges to the plane N^u_p, uniformly in $p \in V$. On the other hand if a point $\xi \in N^u_p(\omega\varepsilon) \times T_pV$ could be found so that $\chi_p(\xi) \in \chi_{p'}N^u$ and $x' = \chi_{p'}^{-1}\chi_p\xi$ has $|x'|_{p'} \geq \varepsilon$ and, all the while, p' is quite near p and $\varepsilon \to 0$, then the point $\chi_p^{-1}(p')$ can be joined to ξ by $\sigma \cup \gamma$ where σ is the segment in T_pX from ξ to $v \in T_pV$ parallel to N^u_p, and γ is the segment from v to $\chi_p^{-1}(p')$ in T_pV. See the figure below, drawn in T_pX.

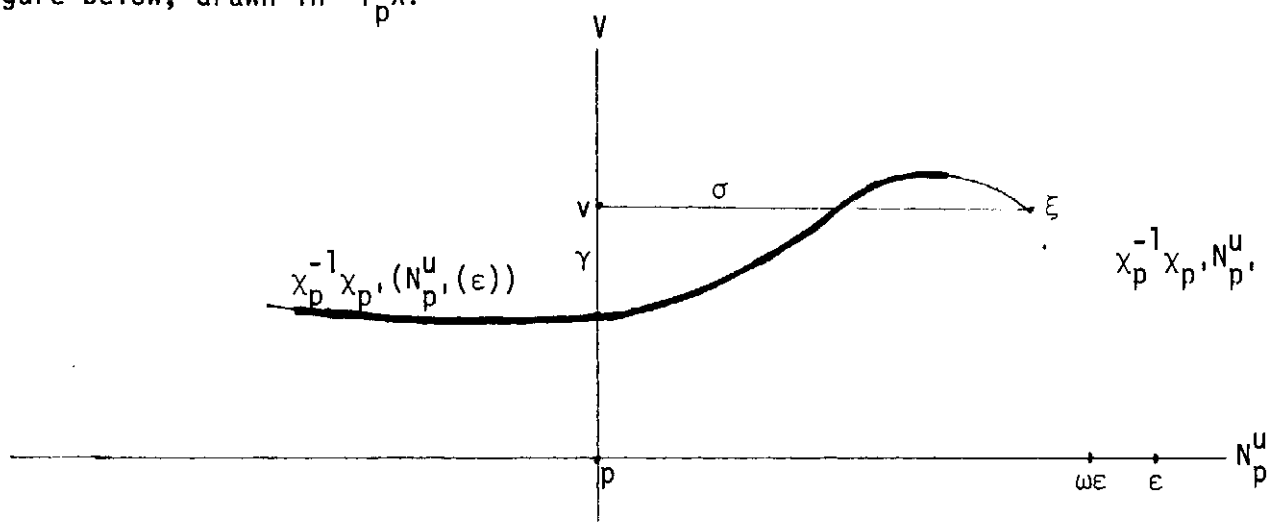

By assumption $\ell_p(\sigma) \leq \omega\varepsilon$ where ℓ_p means length in T_pX. Since exp is the Riemannian exponential map,

$$d_X(p',x') = \text{length } \exp_{p'}[p'x'] = |x'|_{p'} \geq \varepsilon.$$

The length of $\chi_p\sigma$ in M is $(1+o(1))|\sigma|_p \leq (1+o(1))\omega\varepsilon$ as $\varepsilon \to 0$, because $\{\exp_p\}_{p\in M}$ is uniformly tangent to the identity isometry. Hence

$$\ell_p(\gamma) \geq (1+o(1))(1-\omega)\varepsilon$$

as $\varepsilon \to 0$ and p' is near p, in order to keep $d_X(p',x') \geq \varepsilon$. But this contradicts $T(\chi_p^{-1}\chi_{p'}N^u_{p'})$ being very near N^u_p. For somewhere the slope of $\chi_p^{-1}\chi_{p'}N^u_{p'}$ (relative to the product $N^u_p \times T_pV$) would be $\geq \ell_p(\gamma)/\varepsilon = (1+o(1))(1-\omega) \not\to 0$. This argument is uniform and works at all p simultaneously by compactness of V. The proof of (iv) is similar.

Let $\underline{\lambda} = \inf_V m(N^u_p f)$, $\underline{\mu} = \inf_V m(V_p f)$ where $N^u_p f = Tf|N^u_p$, $V_p f = Tf|T_pV$. Since V is compact, $\underline{\mu} > 0$; since f is normally hyperbolic $\underline{\lambda} > 1$. Choose μ, λ, ω, and ω' so that

$$0 < \mu < \underline{\mu} \qquad 1 < \lambda < \underline{\lambda}$$

$$0 < \omega < \omega' < 1 \qquad \lambda\omega > 1$$

Express $\sigma\colon X(\varepsilon) \to E(\varepsilon)$, $\sigma \in \Sigma_0(1,\varepsilon)$, in the e_p-chart as $\sigma_p = e_p^{-1}\sigma e_p$. By (i) we can choose δ_1 so small that $|\xi| \leq \delta_1$ implies

$$L_\xi(\sigma_p) \leq 2 \qquad \xi \in T_pX$$

for all $\sigma \in \Sigma_0(1,\varepsilon)$, all $p \in V$, and all small ε. By (ii) $e_{fp}^{-1}\circ(\pi f)\circ e_p = A_p + \rho_p$ where the remainder ρ_p has $L(\rho_p|T_pM(\nu)) \not\to 0$ as $\nu \to 0$. Thus

$$\chi_{fp}^{-1}\circ(\pi f\sigma)\circ\chi_p = A_p + \rho_p\sigma_p$$

with $L(\rho_p\sigma_p|N^u_p(\varepsilon)\times T_pV(\nu)) \not\to 0$ as $\varepsilon, \nu \to 0$. By (3.7) applied to $h = \chi_{fp}^{-1}\circ\pi\delta\sigma\circ\chi_p$ we see that

$$\chi_{fp}^{-1}\circ\pi f\sigma\circ\chi_p|N^u_p(\omega'\varepsilon)\times T_pV(\delta) \quad \text{is injective}$$

$$\chi_{fp}^{-1}\circ(\pi f\sigma)\circ\chi_p(N^u_p(\omega\varepsilon)\times T_pV(\omega\varepsilon)) \supset N^u_{fp}(\lambda\omega\varepsilon)\times T_{fp}V(\mu\omega\varepsilon)$$

where δ was determined by (iii) and, besides, ε, δ are small enough so that by (iii

$$N_p^u(\omega'\varepsilon)\times T_pV(\delta)\subset \text{domain } \sigma_p = \chi_p^{-1}(X(\varepsilon))$$

$$L(\rho_p\sigma_p|N_p^u(\omega'\varepsilon)\times T_pV(\delta)) < \min(\underline{\lambda}-\lambda,\underline{\mu}-\mu)\ .$$

Note that $\chi_{fp}^{-1}\circ(\pi f\sigma)\circ\chi_p$ carries 0 to 0, a requirement of (3.7). Thus

$$\text{(v)}\qquad \begin{aligned} &\pi f\sigma \text{ is injective on } X_p(\omega'\varepsilon,\delta)\subset X(\varepsilon)\\ &\pi f\sigma(\bigcup_{p\in V} X_p(\omega\varepsilon,\omega\varepsilon))\supset X(\varepsilon)\ . \end{aligned}$$

We could prove that no point of $X(\varepsilon)$ has a $\pi f\sigma$ inverse image *except* in $\bigcup_{p\in V} X_p(\omega\varepsilon,\omega\varepsilon)$, so that $(\pi f\sigma)^{-1}|X(\varepsilon)$ would be perfectly well defined. But it suffices for us to show that there is a right inverse for $\pi f\sigma$ defined on $X(\varepsilon)$, taking values in $\bigcup_{p\in V} X_p(\omega\varepsilon,\omega\varepsilon)$. Suppose, on the contrary, that for arbitrarily small $\varepsilon > 0$ there existed $\sigma\in\Sigma_0(1,\varepsilon)$ such that $\pi f\sigma(x) = \pi f\sigma(x')\in X(\varepsilon)$ and $x\in X_p(\omega\varepsilon,\omega\varepsilon)$, $x'\in X_{p'}(\omega\varepsilon,\omega\varepsilon)$. Since $f|V$ is injective and V is compact, the points p, p' must become arbitrarily close to each other along V. Thus the point $\chi_p^{-1}(x)$, $\chi_p^{-1}(x')$ would lie in $N_p^u(\omega'\varepsilon)\times T_pV(\delta)$ by (iv). This contradicts (v). Hence for small $\varepsilon > 0$, the right inverse for $\pi f\sigma$ which takes $X(\varepsilon)$ into $\cup X_p(\omega\varepsilon,\omega\varepsilon)$ exists and is given locally as in (3.7). Call g this right inverse. Then for small ε, while $\pi f\sigma(x)\in X(\varepsilon)$ and $x\in X_p(\omega\varepsilon,\omega\varepsilon)$;

$$L_{\pi f\sigma(x)}(g)\le \left(m(A_p) - L(\rho_p\sigma_p|T_pX(\omega\varepsilon)) - o(1)\right)^{-1}$$

as $\varepsilon\to 0$. (We use also (i) here to relate the norms, introducing the $o(1)$ term). Hence

$$L_{\pi f\sigma(x)}(g)\le m(A_p)^{-1} + o(1)$$

as $\varepsilon\to 0$. Continuing in a similar way, we estimate the slope of $f_\#\sigma = f\circ\sigma\circ g$ in the e_{fp}, e_p charts as

$$\begin{aligned} L_{\pi f\sigma(x)}(f_2\sigma g) &\le L_{\sigma x}(f_2)L_x(\sigma)L_{\pi f\sigma(x)}(g)\\ &\le \left(\|N_p^s f\| + o(1)\right)\left(\text{slope } \sigma + o(1)\right)\left(m(A_p)^{-1} + o(1)\right) \end{aligned}$$

as $\varepsilon\to 0$. Since $T_pV\perp N_p^u$, $m(A_p) = m(V_pf)$. By f_2 we mean the component of f in the fiber Y, thus $f = (f_1,f_2)$. By normal hyperbolicity $\sup_p \|N_p^s f\| m(V_pf)^{-1} < 1$ and so $f_\#$ indeed carries $\Sigma_0(1,\varepsilon)$ into itself.

To find a fixed point of $f_\#$ we only need to observe that $\Sigma_0(1,\varepsilon)$ is compact, convex, and apply Schauder's Theorem. For the uniqueness and permanence parts of Theorem 4.1, we want to know $f_\#$ is a contraction. For $\sigma, \sigma' \in \Sigma_0(1,\varepsilon)$ let g, g' be the right inverses of $\pi f\sigma, \pi f\sigma'$. For $x \in X(\varepsilon)$,

$$g(x) \in X_p(\omega\varepsilon,\omega\varepsilon) \qquad g'(x) \in X_{p'}(\omega\varepsilon,\omega\varepsilon) .$$

As $\varepsilon \to 0$, it is clear that $d_V(p,p') \not\to 0$ and by (iv)

$$X_{p'}(\omega\varepsilon,\omega\varepsilon) \subset X_p(\omega'\varepsilon,\delta) .$$

Therefore, to estimate $|f_\#\sigma(x) - f_\#\sigma'(x)|$ we can work in the charts e_p, e_{fp}. As in [22] we see that

$$\begin{aligned} |g(x) - g'(x)| &= |g\circ(\pi f\sigma')\circ g'(x) - g\circ(\pi f\sigma)\circ g'(x)| \\ &\le L(g)|(\pi f\sigma')\circ g'(x) - (\pi f\sigma)\circ g'(x)| \\ &\le \left(m(A_p)^{-1} + o(1)\right)L(\rho_p|T_pX(\varepsilon))|\sigma-\sigma'|(1+o(1)) \end{aligned}$$

in those charts as $\varepsilon \to 0$. Thus

$$\begin{aligned} |f\sigma g(x) - f\sigma' g'(x)| &= |f_2\sigma g(x) - f_2\sigma' g'(x)| \\ &\le |f_2\sigma g(x) - f_2\sigma' g(x)| + |f_2\sigma' g(x) - f_2\sigma' g'(x)| \\ &\le k|\sigma-\sigma'| + L(f_2\sigma')|g(x) - g'(x)| \\ &\le [k + (1+o(1))^2 k\left(m(A_p)^{-1} + o(1)\right)o(1)]|\sigma-\sigma'| \end{aligned}$$

as $\varepsilon \to 0$. Thus $f_\#$ contracts $\Sigma_0(1,\varepsilon)$ when ε is small. Let σ_f be the unique fixed point of the contraction $f_\#$ and consider $W^u_\varepsilon = \sigma_f(X(\varepsilon))$.

$$f\left(\sigma_f(X(\varepsilon))\right) \supset \sigma_f(X(\varepsilon)) .$$

These same estimates show that

$$\text{(vi)} \qquad \begin{aligned} W^u_\varepsilon &= \bigcap_{n\ge 0} f^{-n}E(\varepsilon) \\ &= \{z \in E(\varepsilon) : \forall n \ge 0\ \exists z' \in E(\varepsilon) \text{ with } f^n z' = z\} \end{aligned}$$

For by backward invariance, $\sigma_f(X_\varepsilon) \subset \bigcap_{n\ge 0} f^{-n}E(\varepsilon)$, while if $z \in E_x(\varepsilon)$, $z' \in E_{x'}(\varepsilon)$ and $f^n z' = z$, then

$$|\sigma_f(x) - z|_x \le \left(k^n + o(1)\right)|\sigma_f(x') - z'|$$

as $\varepsilon \to 0$. This shows $\sigma_f(x) - z$ is arbitrarily small if $z \in \bigcap_{n\geq 0} f^{-n}E(\varepsilon)$, and hence (vi). Thus, any backward invariant set near V is contained in W^u_ε. This proves the W^u part of Theorem 4.1(b), (c) -- uniqueness and characterization. The W^s part is done by considering f^{-1} instead of f. This characterization lets us remark at once that

$$W^u_{\varepsilon'} = W^u_\varepsilon \cap E(\varepsilon') \quad \text{for} \quad 0 < \varepsilon' \leq \varepsilon .$$

It also follows from the local estimates that for any ε', $0 < \varepsilon' \leq \varepsilon$,

$$\text{(vii)} \qquad \bigcup_{n\geq 0} f^n W^u_{\varepsilon'} = W^u_\varepsilon .$$

We are going to apply techniques of Lipschitz jets to conclude W^u_ε is of class C^1. Let $\mathcal{J}$ be the bundle over $X_1 = \pi f W^u_\varepsilon$ whose fiber at x is

$$\mathcal{J}_x = \{J\sigma \in J(X,x;E,\sigma_f(x)) : \sigma \text{ is a local section of } E\}$$

and let $\mathcal{D}$ be the unit disc bundle in $\mathcal{J}$. As in §3, f induces a natural bundle map

$$\begin{array}{ccc} \mathcal{D}|X(\varepsilon) & \xrightarrow{\quad \mathcal{J}f \quad} & \mathcal{D} \\ \downarrow & & \downarrow \\ X(\varepsilon)^{\text{discrete}} & \xrightarrow{\pi f \sigma_f} & X_1^{\text{discrete}} \end{array}$$

defined by $\mathcal{J}f(J_x\sigma) = J_{x_1}(f\sigma g)$ where $\pi f\sigma_f(x) = x_1$ and g is the local right inverse of $\pi f\sigma$ supplied by (3.7). Clearly $\mathcal{J}f$ preserves $\mathcal{J}^d$ = jets of differentiable sections because $f\sigma g$ is differentiable whenever σ is. Likewise, $\mathcal{J}f$ contracts the fibers of $\mathcal{D}$. To prove that $\mathcal{J}f$ really does carry jets of slope ≤ 1 into jets of slope ≤ 1, we merely estimate in the uniform charts, again,

$$\begin{aligned} \text{slope}_{x_1}(f\sigma g) &= L_{x_1}(f_2\sigma g) \leq L_x(f_2\sigma)L_{x_1}(g) \\ &\leq \big(k_p + o(1)\big)\big(m(A_p)^{-1} + o(1)\big) \\ &= \big(k_p + o(1)\big)\big(m(V_p f)^{-1} + o(1)\big) \end{aligned}$$

as $\varepsilon \to 0$, since $N^u \perp TV$. By normal hyperbolicity this is indeed < 1 for small ε. Likewise, for two such sections σ, σ'

$$L_{x_1}(f_\#\sigma - f_\#\sigma') = |J_{x_1}(f_\#\sigma) - J_{x_1}(f_\#\sigma')|_{\mathcal{J}_{x_1}}$$

and so in the chart

$$
\begin{aligned}
|\mathcal{J}f\sigma - \mathcal{J}f\sigma'|_{\mathcal{J}_{x_1}} &= L_{x_1}(f_2\sigma g - f_2\sigma' g') \\
&\le L_{x_1}(f_2\sigma g - f_2\sigma' g) + L_{x_1}(f_2\sigma' g - f_2\sigma' g') \\
&\le L_x(f_2\sigma - f_2\sigma')L_{x_1}(g) + L_x(f_2\sigma')L_{x_1}(g'g') \\
&\le (k_p + o(1))L_x(\sigma-\sigma')(m(A_p)^{-1} + o(1)) \\
&\quad + o(1)(m(A_p)^{-1} + o(1))o(1)L_x(\sigma-\sigma')(1 + o(1))
\end{aligned}
$$

which by normal hyperbolicity proves $\mathcal{J}f$ contracts fibers as claimed.

Then apply (3.1). The unique $\mathcal{J}f$-invariant section $\sigma_{\mathcal{J}f}$ takes values only in $\mathcal{J}^d$. But clearly $x \mapsto J_x(\sigma_f)$ is also a $\mathcal{J}f$-invariant section of $\mathcal{D}$. Thus,

$$J_x(\sigma_f) = \sigma_{\mathcal{J}f}(x)$$

and so σ_f is differentiable and has slope everywhere ≤ 1. Let $\mathcal{B}$ be the disc bundle over X whose fiber at x is

$$\mathcal{B}_x = \{P \in L(T_xX, E_x) : \|P\| \le 1\} .$$

Up to translation along the E-fibers

$$
\begin{aligned}
\text{graph } \mathcal{L}f(P) &= T_z f \text{ graph}(P) && P \in \mathcal{B}_x \\
\mathcal{L}f(P) &= (C_z + K_z P)\circ(A_z + B_z P)^{-1} && z = \sigma_f(x)
\end{aligned}
$$

defines a fiber contraction

$$
\begin{tikzcd}
\mathcal{B}|X(\varepsilon) \arrow[r, "\mathcal{L}f"] \arrow[d] & \mathcal{B} \arrow[d] \\
X(\varepsilon) \arrow[r, "\pi f \sigma_f"] & X
\end{tikzcd}
$$

An $\mathcal{L}f$-invariant section of $\mathcal{B}$ is provided by the (a priori discontinuous) tangent bundle of W^u_ε, but by (3.1), there is only one such section and it is continuous. Hence W^u_ε is C^1.

Restricting $\mathcal{B}$ to V, the same reasoning shows that $T_V W^u = N^u \oplus TV$. In sum, then, given an r-normally hyperbolic f at a compact C^1 manifold V we have

constructed a local C^1 manifold W^u_ε through V such that

$$fW^u_\varepsilon \supset W^u_\varepsilon$$

$$T_V W^u_\varepsilon = N^u \oplus TV$$

To prove that W^u_ε is C^r, we must abandon the smoothed versions of N^u, N^s, V since they were only C^1 related to the original ones. Let us also remark that in general N^u, N^s will be just Hölder continuous no matter how r-normally hyperbolic is f, so this smoothing trick à la Whitney's Extension Theorem directly produces only C^1 results.

Assume by induction that W^u_ε is C^{r-1}, $r \geq 2$. Instead of smoothing the bundle N^u, TV, N^s let us C^0 approximate TW^u_ε, N^s by C^∞ bundles $\tilde{T}$, $\tilde{N}^s$ defined in a neighborhood of W^u_ε. Then consider the C^{r-1} bundle $\tilde{L}$ over W^u_ε whose fiber at x is

$$\tilde{L}_x = L(\tilde{T}_x, \tilde{N}^s_x) .$$

Express Tf respecting the splitting $\tilde{T} \oplus \tilde{N}^s$ as

$$Tf = \begin{bmatrix} \tilde{A} & \tilde{B} \\ \tilde{C} & \tilde{K} \end{bmatrix}$$

At $p \in V$, $\tilde{T} \to TW^u_\varepsilon$ and $\tilde{N}^s \to N^s$ imply $\|\tilde{B}_p\|, \|\tilde{C}_p\| \rightrightarrows 0$, $m(\tilde{A}_p) \rightrightarrows m(Tf|N^u_p + T_pV) = \alpha_p$ $\|\tilde{K}_p\| \rightrightarrows \|Tf|N^s_p\| = k_p$. Let $\tilde{\mathcal{D}}$ be the unit disc bundle of $\tilde{L}$. For any $P_x \in \tilde{\mathcal{D}}_x$ consider the formula

$$\tilde{L}f(P_x) = (\tilde{C}_x + \tilde{K}_x P_x) \circ (\tilde{A}_x + \tilde{B}_x P_x)^{-1} .$$

For x near V and very good approximations $\tilde{T}$, $\tilde{N}^s$, $\tilde{L}f(P_x)$ is well defined and of norm ≤ 1. This $\tilde{L}f$ is the natural action of Tf on $\tilde{L}$ according to

$$\text{graph } \tilde{L}f(P_x) = Tf \text{ graph } P_x$$

where graph $P_x = \{\xi + P_x\xi : \xi \in \tilde{T}_x\}$. Thus

$$\begin{array}{ccc} \tilde{\mathcal{D}}_{\varepsilon'} & \xrightarrow{\tilde{L}f} & \tilde{\mathcal{D}}_\varepsilon \\ \downarrow & & \downarrow \\ W^u_{\varepsilon'} & \xrightarrow{f} & W^u_\varepsilon \end{array} \qquad 0 < \varepsilon' < \varepsilon$$

Likewise it is clear that (near V and for good approximations $\tilde{T}$, $\tilde{N}^s$) $\tilde{L}f$ contracts the fibers of $\mathcal{D}_{\varepsilon'}$ by a constant approximately equal to $k_p\alpha_p$. On the base, the pointwise Lipschitz constant of f^{-1} is approximately α_p. Thus we may apply (3.5) with the $(r-1)$-conditions. The unique $\tilde{L}f$-invariant section is C^{r-1}, i.e. $TW^u_{\varepsilon'} \in C^{r-1}$, i.e. $W^u_{\varepsilon'} \in C^r$. By (vii), it follows that W^u_ε is C^r also.

As mentioned above, these results when applied to f^{-1} produce W^s_ε, also of class C^r. Thus $V = W^u_\varepsilon \pitchfork W^s_\varepsilon$ is of C^r too. In all, we have proved parts (a), (b) (c), (d) of Theorem 4.1. Part (e), lamination, will be deduced in §5. Let us consider part (f), permanence.

When $r = 1$, we can go back to the construction of W^u_ε for f. If we enlarge the class of sections $\Sigma_0(1,\varepsilon)$ to

$$\Sigma_\zeta(1,\varepsilon) = \{\text{sections } \sigma\colon X(\varepsilon) \to E(\varepsilon)\colon |\sigma(p)| \le \zeta,\ p \in V,\ \text{slope } \sigma \le 1\}$$

and if $\zeta \to 0$ even faster than ε, then for f' extremely near f in the C^1 sense, $f'_\#\sigma = f'\sigma g'$ will be a well defined contraction of $\Sigma_\zeta(1,\varepsilon)$, where g' is a right inverse of $\pi f'\sigma$. In fact, $f'_\#$ will tend to $f_\#$ in the C^0 sense as $f' \to f$ in the C^1 sense since all the sections σ have slope ≤ 1. (See also §5.) Thus, the fixed point $\sigma_{f'}$ will tend to σ_f in the C^0 sense. That is, we can construct for f' a manifold $W^u_\varepsilon(f') = \sigma_{f'}(X(\varepsilon))$ such that $f'W^u_\varepsilon(f') \supset W^u_\varepsilon(f')$ very near $W^u_\varepsilon(f)$. To prove that $W^u_\varepsilon(f')$ is C^1 is merely a perturbation of the proof that $W^u_\varepsilon(f)$ was C^1. We find $\sigma_{\mathcal{J}f'}$ in $\mathcal{D}'$

$$\begin{tikzcd} \mathcal{D}' \arrow[r, "\mathcal{J}f'"] \arrow[d] & \mathcal{D}' \arrow[d] \\ X(\varepsilon) \arrow[r, "\pi f'\sigma_{f'}"] & X'_1 \end{tikzcd}$$

$$\mathcal{D}'_x = \{J_x\sigma \in J(X,x;E,\sigma_{f'}(x))\colon \sigma \text{ is a local section of } E \text{ slope } \sigma \le 1\}$$

and $\sigma_{\mathcal{J}f'}(x) = J_x(\sigma_{f'})$. Thus $W^u_\varepsilon(f')$ is C^1.

To prove that $W^u_\varepsilon(f')$ is C^1 near $W^u_\varepsilon(f)$ we must find $\sigma_{\mathcal{L}f}$, $\sigma_{\mathcal{L}f'}$ as invariant sections in the *same bundle*. Let $\mathcal{D}\mathcal{L}$ be the unit disc bundle in $\mathcal{L}$ where

$$\mathcal{L}_x = L(T_xX, E_x)\ .$$

The maps f, f' induce $\mathcal{L}f$, $\mathcal{L}f'$

$$\begin{tikzcd} \mathcal{D}L \arrow[r, "Lf"] \arrow[d] & \mathcal{D}L \arrow[d] \\ X(\varepsilon) \arrow[r, "\pi f \sigma_f"] & X \end{tikzcd} \qquad \begin{tikzcd} \mathcal{D}L \arrow[r, "Lf'"] \arrow[d] & \mathcal{D}L \arrow[d] \\ X(\varepsilon) \arrow[r, "\pi f' \sigma_{f'}"] & X \end{tikzcd}$$

given by

$$\text{graph } Lf'(P_x) = T_{\sigma_{f'}(x)} f'(\text{graph } P_x) \qquad P_x \in \mathcal{D}L_x$$

where the plane graph $P_x = \{\xi + P_x\xi\} \subset T_xE$, can naturally be considered to lie in any T_zE, $\pi z = x$, by triviality of E. As $f' \to f$, C^1, it is clear that $Lf' \to Lf$, C^0. Both are fiber contractions by the usual estimates and so the invariant section of Lf' converges to that of Lf in the C^0 sense by (3.5). Since $TW^u_\varepsilon(f')$ is Tf'-invariant, this shows that $TW^u_\varepsilon(f') \to TW^u_\varepsilon(f)$ in the C^0 sense, that is, $W^u_\varepsilon(f') \to W^u_\varepsilon(f)$, C^1, as $f' \to f$, C^1.

Applying this result to f^{-1} gives $W^s_\varepsilon(f') \to W^s_\varepsilon(f)$, C^1, as $f' \to f$, C^1, and thus by transversality there exists $V' = W^u_\varepsilon(f') \pitchfork W^s_\varepsilon(f') \to V$, C^1, as $f' \to f$, C^1. By backward and forward invariance of $W^u_\varepsilon(f')$, $W^s_\varepsilon(f')$, V' is f' invariant.

Let us prove that f' is r-normally hyperbolic at V'. Choose and fix any C^r tubular neighborhood of V, say $t: U \to V$. Restricted to V', t gives a C^1 diffeomorphism $h_{f'}: V' \to V$. Let θ be a C^∞ connector on TM -- a choice of isometries $\theta_{p,q}: T_pM \to T_qM$ defined for all (p,q) near the diagonal in $M \times M$ such that $\theta_{p,p} \equiv$ identity and θ is C^∞ in p, q. Such θ are easy to construct by patching together local ones. Then consider

$$\begin{tikzcd} T_VM \arrow[r] \arrow[d, "(\theta h)^{-1}"'] & T_VM \\ T_{V'}M \arrow[r, "Tf'"] & T_{V'}M \arrow[u, "\theta h"'] \end{tikzcd} \qquad \begin{aligned} &\theta h: T_{p'}M \to T_pM \\ &h_f(p') = p \end{aligned}$$

$\theta h\, Tf'(\theta h)^{-1}$ is a bundle map which is C^0 near Tf. Thus, by Theorem 2.11, $\theta h\, Tf'(\theta h)^{-1}$ is also r-hyperbolic and θ of the splitting $E_1 \oplus E_2 \oplus E_3 = T_VM$ is Tf' invariant. Since θh is near 1, when f' is C^1 near f uniqueness in (2.11) implies $TV' = \theta h E_2$. Thus Tf' is r-hyperbolic at V'. For $r = 1$, this proves part (f) of Theorem 4.1 -- except for the lamination business which is in §5.

Note that we do not need f' to be C^r near f in order to get that f' is r-hyperbolic at V' -- just that f' be C^1 near f and of class C^r. Likewise

this proves V', $W^u_\varepsilon(f')$, $W^s_\varepsilon(f')$ are of class C^r without further effort, by applying what we already know about any r-normally hyperbolic diffeomorphism to f' at V'.

Now we want to show $W^u_\varepsilon(f') \to W^u_\varepsilon(f)$, C^r, as $f' \to f$, C^r, $r \geq 2$. Assume $W^u_\varepsilon(f') \to W^u_\varepsilon(f)$, C^{r-1}, by induction. Choose a C^r tubular neighborhood of $W^u_{3\varepsilon}$, say $t: U \to W^u_{3\varepsilon}$. Since $W^u_{2\varepsilon}(f') \to W^u_{2\varepsilon}(f)$, C^1, as $f' \to f$, C^r, we do know that $W^u_{2\varepsilon}(f')$ appears to be a partial section of t. That is, t provides a C^{r-1} embedding $h_{f'}: W^u_{2\varepsilon}(f') \to W^u_{3\varepsilon}(f)$ which converges to 1, C^{r-1}, as $f' \to f$, C^r. We use $h_{f'}$ and the connector θ to convert $Tf'|W^u_\varepsilon(f')$ into a map over $W^u_\varepsilon(f)$.

$$\begin{tikzcd}
T_{W^u_\varepsilon(f)}M \arrow[r] \arrow[d, "(\theta h)^{-1}"'] & T_{W^u f}M \\
T_{W^u_{2\varepsilon}(f')}M \arrow[r, "Tf'"] & T_{W^u(f')}M \arrow[u, "\theta h"']
\end{tikzcd}$$

This induces a bundle map

$$\begin{tikzcd}
\mathcal{D}_\varepsilon \arrow[r, "Lf'"] \arrow[d] & \mathcal{D} \arrow[d] \\
W^u_\varepsilon(f) \arrow[r, "h_{f'}f'h_{f'}^{-1}"] & W^u(f)
\end{tikzcd}$$

where $\mathcal{D}$ is the unit disc bundle in L, $L_x = L(T_x W^u_\varepsilon, \tilde{N}^s_x)$ just as did Tf. (The bundle $\tilde{N}^s$ is a C^∞ approximation to N^s defined near V.) In fact Lf' is C^{r-1} near Lf by induction. Thus, by (3.5), the invariant sections converge C^{r-1}. The Lf'-invariant section represents $TW^u_\varepsilon(f')$ (over $W^u_\varepsilon(f)$) by uniqueness, as usual. Thus $TW^u_\varepsilon(f') \to TW^u_\varepsilon(f)$, C^{r-1}, i.e. $W^u_\varepsilon(f) \to W^u_\varepsilon(f')$, C^r, as $f' \to f$, C^r. Likewise W^s. Except for laminations (see §5) this completes the proof of 4.1(f), permanence.

Now let us consider an eventually r-normally hyperbolic diffeomorphism f. Let $T_V M = N^u \oplus TV \oplus N^s$ be a Tf-invariant splitting which displays it. Then f^n is immediately r-normally hyperbolic for large n, and so we have $W^u(f^n)$, $W^s(f^n)$. As usual

$$f^n(fW^u(f^n)) = f(f^nW^u(f^n)) \supset fW^u(f^n)$$

implies, by uniqueness of $W^u(f^n)$, that $fW^u(f^n) = W^u(f^n)$. Similarly W^s, W^{uu}, W^{ss}. If $f' \doteq f$, C^1, then $f'^n \doteq f^n$, C^1 (n large but fixed), and so the V' for f'^n serves for V. In this way all questions about f are solved by looking at f^n.

Similarly for flows. If a flow $\{f^t\}$ is eventually r-normally hyperbolic then f^a is immediately r-normally hyperbolic for some a. By uniqueness, $W^u(f^a)$, etc. are locally f^t invariant for all f^t.

Except for lamination (see §5) and linearization (see [41]) the rest of the results for flows follow from those for diffeomorphisms.

Remark 1. If X is a C^r vector field, $r \geq 1$, whose flow is r-normally hyperbolic at V, then Theorem 4.1 applies to perturbations of X. See [47,29]. If X' is a C^r vector field, C^1 near X, then X' has a unique invariant V' near V. At V' the X'-flow is r-normally hyperbolic. V' is of class C^r. As $X' \to X$ in the C^r sense, V', $W^{u'}$, $W^{s'} \to V$, W^u, W^s in the C^r sense. For the X'-flow converges to the X-flow in the C^r sense, $r \geq 1$, whenever $X' \to X$, C^r.

Remark 2. The same permanence proof works for a Lipschitz small perturbation of a C^1 normally hyperbolic f. It would not seem hard to state and prove a purely Lipschitz theorem along these lines (f and V would be just Lipschitz) using tangent cones instead of tangent planes.

Remark 3. These techniques can be used to answer the following question of R. Thom. If V is a compact C^1 manifold contained in the open set $U \subset M$, $\dim M > \dim V$, and if $f: U \to V$ is a C^r retraction $1 \leq r \leq \infty$ then V is of class C^r. (Up till now our results were for diffeomorphisms, so no f could be ∞-normally hyperbolic at V. Thom's f is just the sort which can be ∞-normally hyperbolic.) The case $r = 1$ is vacuous so assume the result for $r-1$, i.e. $V \in C^{r-1}$, $r \geq 2$. Consider the kernel of Tf which is a C^{r-1} bundle over V, and $T_VM = TV \oplus K$. Clearly K is invariant. Let $\tilde{T}$ be a C^{r-1} bundle over V closely approximating TV. Consider the bundle $\tilde{L}$ whose fiber at $p \in V$ is

$$\tilde{L}_p = L(\tilde{T}_p, K_p) .$$

Let Tf act on $\tilde{L}$ in the natural way, say $\tilde{L}f: \tilde{L} \to \tilde{L}$. This $\tilde{L}f$ is a C^{r-1} map and has fiber contraction constant $= 0$. So by the C^{r-1} section theorem, $\tilde{L}f$ has a unique invariant section, and it is of class C^{r-1}. Thus TV is C^{r-1} and V is C^r.

A more interesting feature of such an f is the existence of strong stable manifolds -- even though we cannot just blindly take f^{-1} and look at its strong unstable manifolds. See §5.

§5. Pseudo Hyperbolicity and Plaque Families. In this section we generalize the notion of hyperbolic set appearing in [22] to permit singular and center behavior. Our proofs will be based on the C^r section theorem and the methods of §4 instead of on the Fiber Contraction theorem [22]. Then we go on to prove the lamination parts of (4.1). Finally, we show how the strong unstable manifold theory gives a different way to construct W^u. In §5A, we prove some classical center manifold theorems, not used in the rest of the paper.

Definition. A linear endomorphism of a Banach space $T: E \to E$ is *ρ-pseudo hyperbolic* if its spectrum lies off the circle of radius ρ.

Corresponding to this spectral decomposition is a T-invariant splitting of E, $E_1 \oplus E_2$. The spectrum of $T|E_1$ lies outside the radius ρ, while that of $T|E_2$ lies inside. The map $T_2 = T|E_2$ might not be an automorphism, but it carries E_2 into E_2 and carries nothing else into E_2. The map $T|E_1$ *is* an automorphism of E_1. Renorming E we can assume $m(T_1) > \rho$, $\|T_2\| < \rho$, $|(x,y)| = \max(|x|,|y|)$ for $x \in E_1$, $y \in E_2$. See (2.8).

Definition. If f is a smooth endomorphism of a manifold M and $f|\Lambda$ is a homeomorphism $\Lambda \to \Lambda$ then Λ is *ρ-pseudo hyperbolic* for f if and only if the map $Tf: T_\Lambda M \to T_\Lambda M$ induces a ρ-pseudo hyperbolic endomorphism on the space of bounded sections of $T_\Lambda M$ by $f_b: \sigma \mapsto Tf \circ \sigma \circ (f|\Lambda)^{-1}$.

By estimates similar to (2.2), this is equivalent to the existence of a Tf-invariant splitting $T_\Lambda M = E_1 \oplus E_2$ such that Tf is an automorphism of E_1, "expanding" it by more than the factor ρ, and Tf is an endomorphism of E_2 having norm $< \rho$.

The following theorem is the analogue of [22] for pseudo hyperbolic maps.

(5.1) *THEOREM. If* $T: E \to E$ *is a* ρ*-pseudo hyperbolic endomorphism of a Banach space,* $E = E_1 \oplus E_2$ *is the canonical splitting,* $f: E \to E$ *is a* C^r *map,* $r \geq 1$, $f(0) = 0$, *and* $L(f-T) \leq \varepsilon$ *is small, then the sets* W_1, W_2, *defined by*

$$W_1 = \bigcap_{n\geq 0} f^n S_1 \qquad S_1 = \{(x,y) \in E_1 \times E_2 : |x| \geq |y|\}$$

$$W_2 = \bigcap_{n\geq 0} f^{-n} S_2 \qquad S_2 = \{(x,y) \in E_1 \times E_2 : |y| \geq |x|\}$$

are graphs of C^1 *maps* $E_1 \to E_2$, $E_2 \to E_1$. *They are characterized by*

$$z \in W_1 \Leftrightarrow \textit{there exist inverse images } f^{-n}z \textit{ such that } |f^{-n}z|/\rho^{-n} \to 0 \textit{ as } n \to \infty$$

$$z \in W_2 \Leftrightarrow |f^n z|/\rho^n \to 0 \textit{ as } n \to \infty .$$

"$\to 0$" can be replaced by "stays bounded." If $\|T_1^{-1}\|^j \|T_2\| < 1$, $1 \leq j \leq r$ *then* W_1 *is* C^r *and if* $\|T_1\|^{-1}\|T_2\|^j < 1$, $1 \leq j \leq r$ *then* W_2 *is* C^r. *The manifolds* W_1, W_2 *depend continuously on* f *in the* C^r *sense.*

Remark. There are some cases in which we need not assume f globally defined and $f(0) = 0$. These cases in which W_1, W_2 are locally defined will be discussed in (5.4), (5.9).

Proof of (5.1). Let $Df = \begin{pmatrix} A & B \\ C & K \end{pmatrix}$ respecting $E_1 \times E_2$. Since $L(f-T) \leq \varepsilon$ is small, $\alpha k < 1$ and $b, c \leq \varepsilon$ where $\alpha = \sup \|A_z^{-1}\|$, $k = \sup \|K_z\|$, $b = \sup \|B_z\|$, $c = \sup \|C_z\|$.

We consider sections $\sigma: E_1 \to E$ such that $\sigma(0) = 0$ and $L(\sigma) \leq 1$. The graph transform $f_\#$ is defined by $f_\#\sigma = f \circ \sigma \circ g$ where $g = (f_1\sigma)^{-1}$. Since $f_1\sigma: E_1 \to E_1$ and $L(T_1 - f_1\sigma) \leq bL(\sigma) + L(f-T) \leq 2\varepsilon$, $f_1\sigma: E_1 \to E_1$ is a Lipeomorphism and $f_\#$ is well defined. When $k > 1$, $f_\#$ is not a contraction of our space of sections respecting the usual sup metric. We must consider the new metric,

$$\|\sigma - \sigma'\|_* = \sup_{x \neq 0} \frac{|\sigma x - \sigma' x|}{|x|} \qquad x \in E_1 .$$

On one hand, the metric $\| \ \|_*$ takes into account the Lipschitz constant of $\sigma - \sigma'$ at 0, while on the other, it cares less how σ behaves at ∞.

(5.2) *SUBLEMMA. Under the metric* $\| \ \|_*$ *the space* $\Sigma_0 = \{\sigma \in \Sigma(E_1 \times E_2) : \|\sigma\|_* < \infty\}$ *is a Banach space and* $\Sigma_0(1) = \{\sigma \in \Sigma : L(\sigma) \leq 1\}$ *is a closed subset.*

Proof. If (σ_n) is a Cauchy sequence then clearly σ_n converges uniformly on any bounded subset, $\sigma_n \rightrightarrows \sigma$. For each $x \in E_1 - 0$ and each n, choose $m = m(x,n) \geq n$ such that $|\sigma_m x - \sigma x|/|x| < 1/n$. Then

$$\sup_{x\neq 0}\frac{|\sigma_n x-\sigma x|}{|x|}\le \sup_{x\neq 0}\frac{|\sigma_n x-\sigma_m x|}{|x|}+\frac{|\sigma_m x-\sigma x|}{|x|}\le \varepsilon_n+\frac{1}{n}$$

for $m = m(x,n)$ and $\varepsilon_n = \sup_{m\geq n}\|\sigma_m-\sigma_n\|_*$. Thus $\|\sigma_n-\sigma\|_*\to 0$ and Σ_0 is complete. If $\sigma_n \rightrightarrows \sigma$ on a set S and $L(\sigma_n)\le 1$ then $L(\sigma)\le 1$ on S. Being true on all bounded S, $\Sigma_0(1)$ is closed in Σ_0. This proves (5.2).

For any $\sigma\in\Sigma_0(1)$ we defined $f_\#\sigma = f\sigma g$, $g = (f_1\sigma)^{-1}$. The same estimates as in §4 give

$$L(f_\#\sigma)\le\frac{\alpha k+c\alpha}{1-\alpha b}\le\frac{\alpha k+\varepsilon\alpha}{1-\alpha\varepsilon}\le 1$$

$$L(g)\le\frac{\alpha}{1-\alpha b}\,.$$

Hence, for small ε, $f_\#$ carries $\Sigma_0(1)$ into itself. It is a contraction respecting $\|\ \|_*$ since for $\sigma,\sigma'\in\Sigma_0(1)$ we have

$$\begin{aligned}
\|f_\#\sigma-f_\#\sigma'\|_* &= \sup_{x\neq 0}\frac{|f_2\circ\sigma g(x)-f_2\circ\sigma' g'(x)|}{|x|}\\
&\le \sup_{x\neq 0}\frac{|f_2\circ\sigma\circ g(x)-f_2\circ\sigma\circ g'(x)|}{|x|}+\sup_{x\neq 0}\frac{|f_2\circ\sigma\circ g'(x)-f_2\circ\sigma'\circ g'(x)|}{|x|}\\
&\le L(f_2\sigma)\sup_{x\neq 0}\frac{|g(x)-g'(x)|}{|x|}+\|f_2\sigma-f_2\sigma'\|_*\sup_{x\neq 0}\frac{|g'(x)|}{|x|}\\
&\le (k+\varepsilon)L(g)\|f_1\sigma'-f_1\sigma\|_*\sup_{x\neq 0}\frac{|g'(x)|}{|x|}+\frac{k\alpha}{1-\alpha b}\|\sigma-\sigma'\|_*\\
&\le (k+\varepsilon)\left(\frac{\alpha}{1-\alpha b}\right)b\|\sigma-\sigma'\|_*\left(\frac{\alpha}{1-\alpha b}\right)+\frac{k\alpha}{1-\alpha b}\|\sigma-\sigma'\|_*\\
&\le \left[\varepsilon(k+\varepsilon)\left(\frac{\alpha}{1-\alpha\varepsilon}\right)^2+\frac{k\alpha}{1-\alpha\varepsilon}\right]\|\sigma-\sigma'\|_*
\end{aligned}$$

and this factor is < 1 for ε small. This gives a Lipschitz invariant section, σ_f. To check its differentiability, we consider Lipschitz jets.

Let $\mathcal{J}$ be the bundle over E_1^{discrete} whose fiber at x is $\mathcal{J}_x = \{J_x\sigma\colon \sigma \text{ is a section } E_1\to E,\ \sigma(x)=\sigma_f(x),\ \text{slope}_x\sigma<\infty\}$. Let $\mathcal{D}$ be the unit disc bundle in $\mathcal{J}$.

In §3 we showed that $\mathcal{J}f\colon \mathcal{D}_x\to\mathcal{D}_{hx}$ is well defined by

$$\mathcal{J}f(j) = J_{hx}(f_2\circ\sigma\circ g)\qquad J_x\sigma = j$$

for $h = f_1 \circ \sigma_f$, and, using the same techniques, since Jf contracts fibers by the constant $k\alpha < 1$, σ_f is C^1. If $k\alpha^j < 1$, $1 \le j \le r$, then the fiber contraction of f, $k\alpha$, dominates the first $r-1$ powers of α and hence $J_x(\sigma_f) = \sigma_{Jf}$ is C^{r-1}. Thus $\sigma_f \in C^r$. Note that J was trivial, so it is justifiable to use (3.5). Triviality of J is implied by the fact that E_1 is a vector space.

As in (3.5) it is easy to see that σ_f depends continuously on f, because $f_\#$ does in the C^0 sense, and because σ_{Jf}, $\sigma_{Jf'}$ can be found in the same bundle.

If T is invertible, the pseudo stable manifold theory can be deduced from the pseudo unstable manifold theory as usual. But T may well have a kernel. We must proceed directly.

Even though f^{-1} may not exist as a point valued map, it does exist as a set valued map. Moreover, the fact that $z \ne z'$ implies $f^{-1}z \cap f^{-1}z' = \emptyset$ is nearly as useful as injectivity of a point valued map.

Let Σ_0 be the Banach space of sections $\sigma: E_2 \to E$ with $\sigma(0) = 0$, and with $\|\sigma\|_* = \sup_{y \ne 0} |\sigma(y)-y|/|y| < \infty$. Let $\Sigma_0(1) = \{\sigma \in \Sigma_0 : L(\sigma) \le 1\}$. We claim that f^{-1} defines a contraction $f_\#^{-1}: \Sigma_0(1) \to \Sigma_0(1)$ by the relation

$$f^{-1}(\text{image } \sigma) = \text{image } f_\#^{-1}\sigma .$$

For $\sigma(y) = (y, s(y))$ and any $y \in E_2$, this is equivalent to finding an x, $|x| \le |y|$, with $f_1(x,y) = s(f_2(x,y))$ which in turn is equivalent to finding a fixed point of the transformation

$$x \mapsto T_1^{-1}\big(s(f_2(x,y)) - (f_1 - T_1)(x,y)\big)$$

in $\{x \in E_1 : |x| \le |y|\}$. But this transformation contracts $\{x \in E : |x| \le |y|\}$ into itself since

$$\begin{aligned} |T_1^{-1}\big(s(f_2(x,y)) - (f_1-T_1)(x,y)\big)| &\le \alpha[k|y| + c|x| + \varepsilon|x| + \varepsilon|y|] \\ &\le (\alpha k + 3\alpha\varepsilon)|y| \end{aligned}$$

and

$$\begin{aligned} &|T_1^{-1}\big(s(f_2(x',y')) - (f_1-T_1)(x',y)\big) - T_1^{-1}\big(s(f_2(x,y)) - (f_1-T_1)(x,y)\big)| \\ &\qquad \le \alpha[c|x'-x| + \varepsilon|x'-x|] \le 2\alpha\varepsilon|x'-x| . \end{aligned}$$

Hence $f_\#^{-1}\sigma$ is well defined. As a map $E_2 \to E$ it has Lipschitz constant ≤ 1 since

$f_1(x,y) = s(f_2(x,y))$ and $f_1(x',y') = s(f_2(x',y'))$ imply

$$|x-x'| = |T_1^{-1}(s(f_2(x,y)) - (f_1-T_1)(x,y)) - T_1^{-1}(s(f_2(x',y')) - (f_1-T_1)(x',y'))|$$
$$\leq \alpha[c|x-x'| + k|y-y'| + \varepsilon|x-x'| + \varepsilon|y-y'|]$$

and hence $(1-3\alpha\varepsilon)|x-x'| \leq (\alpha k+\varepsilon)|y-y'|$. So for ε small $|x-x'| \leq |y-y'|$ and $L(f_\#^{-1}\sigma) \leq 1$.

Finally, we claim that $f_\#^{-1}$ contracts $\Sigma_0(1)$ respecting the metric $\| \|_*$. If $\sigma, \sigma' \in \Sigma_1$, $y \in E_2 - 0$, and $(x,y) = (f_\#^{-1}\sigma)(y)$, $(x',y) = (f_\#^{-1}\sigma')(y)$ then

$$\frac{|x-x'|}{|y|} = \frac{|T_1^{-1}(s(f_2(x,y)) - (f_1-T_1)(x,y)) - T_1^{-1}(s'(f_2(x',y) - (f_1-T_1)(x',y))|}{|y|}$$
$$\leq \alpha \frac{|s(f_2(x,y)) - s'(f_2(x',y))| + \varepsilon|x-x'|}{|y|}$$
$$\leq \alpha[\|\sigma-\sigma'\|_* \frac{f_2(x,y)}{|y|} + \frac{s'(f_2(x,y)) - s'(f_2(x',y))}{|y|} + \frac{\varepsilon|x-x'|}{|y|}]$$
$$\leq \alpha[\|\sigma-\sigma'\|_* (\frac{k|y| + c|x|}{|y|}) + \frac{c|x-x'|}{|y|} + \frac{\varepsilon|x-x'|}{|y|}]$$
$$\leq \alpha(k+\varepsilon)\|\sigma-\sigma'\|_* + (2\alpha\varepsilon)|x-x'|/|y| \ .$$

and hence $(1-2\alpha\varepsilon)|x-x'|/|y| \leq \alpha(k+\varepsilon)\|\sigma-\sigma'\|_*$. Taking the suprema over all $y \neq 0$, we get

$$\|f_\#^{-1}\sigma - f_\#^{-1}\sigma'\|_* \leq \frac{\alpha(k+\varepsilon)}{1-2\alpha\varepsilon}\|\sigma-\sigma'\|_* \ ,$$

showing that $f_\#^{-1}$ contracts $\Sigma_0(1)$ when ε is small. Let $\sigma_{f^{-1}}$ be the fixed section. The f^{-1}-invariance of $\text{image}(\sigma_{f^{-1}})$ means that $f^{-1}(\text{image}(\sigma_{f^{-1}})) = \text{image}(\sigma_{f^{-1}})$, even though $f(\text{image}(\sigma_{f^{-1}}))$ may be a proper subset of $\text{image}(\sigma_{f^{-1}})$.

We want to investigate the smoothness of $\sigma_{f^{-1}}$. Our estimates showed that the relation

$$f^{-1}(\text{image } \sigma) = \text{image}(f_\#^{-1}\sigma)$$

defines $f^{-1}\sigma$ if $L(\sigma) \leq 1$ and $\text{image } \sigma \subset S_2 = \{(x,y): |x| \leq |y|\}$ even when σ was only locally defined. Moreover, the estimates show that $L(f_\#^{-1}\sigma) \leq 1$. The same estimation that proves $f_\#^{-1}$ to be a contraction of $\Sigma_0(1)$ under the metric $\| \|_*$, shows that

$$L_y(f_\#^{-1}\sigma - f_\#^{-1}\sigma') \le \frac{\alpha(k+\varepsilon)}{1-2\alpha\varepsilon} L_{y_1}(\sigma-\sigma')$$

if $y_1 = f_2(f_\#^{-1}\sigma(y))$, $f_\#^{-1}\sigma(y) = f_\#^{-1}\sigma'(y)$, and σ, σ' are such local sections at y_1.

Now consider the bundle of jets over E_2^{discrete}, $\mathcal{J}$, whose fiber at y is $\mathcal{J}_y = \{J_y\sigma\colon \sigma \text{ is a section } E_2 \to E,\ \sigma(y) = \sigma_{f^{-1}}(y)\}$. If $y = f_2(f_\#^{-1}\sigma(y))$ and $j \in \mathcal{J}_{y_1}$ can be represented by σ with $L(\sigma) \le 1$ then

$$\mathcal{J}f^{-1}(j) = J_y(f_\#^{-1}\sigma)$$

is well defined. Letting $\mathcal{D}$ be the unit disc subbundle of $\mathcal{J}$, our remarks in the preceding paragraph show that $\mathcal{J}f^{-1}$ contracts the fibers of $\mathcal{D}$ by approximately the factor $k\alpha$. Moreover, $\mathcal{J}f^{-1}$ preserves the complete subset $\mathcal{D} \cap \mathcal{J}^{\text{diff}}$ since the C^1 Implicit Function Theorem determines $f_\#^{-1}\sigma$ when σ is C^1.

The assumption in (3.5) that the base homeomorphism h was point valued can be relaxed to: h is set valued, $hy \cap hy' = \emptyset$ if $y \ne y'$, $h^{-1}\colon Y \to Y$ is Lipschit and obeys the usual restrictions $k_y L_\eta(h^{-1}) \le \tau < 1$ for any $\eta \in hy$. In our case $h^{-1}\colon E_2 \to E_2$ by $y \mapsto f_2(f_\#^{-1}\sigma_{f^{-1}}(y))$ which has Lipschitz constant k. Hence there is a unique $\mathcal{J}f^{-1}$-invariant section of $\mathcal{D}$, and its values lie in $\mathcal{J}^{\text{diff}}$. Reasoning with $\mathcal{L}f^{-1}$ as in §§3, 4 we see that $\sigma_{f^{-1}}$ is C^1. If $k^j\alpha < 1$ for $1 \le j \le r$ then the fiber contraction of $\mathcal{J}f^{-1}$, approximately $k\alpha$, dominates the first $r-1$ powers of k and hence $J_x(\sigma_{f^{-1}}) = \sigma_{\mathcal{J}f^{-1}}$ is C^{r-1}, so $\sigma_{f^{-1}}$ is C^r.

It is easy to see that $\sigma_{f^{-1}}$ depends continuously on f the same way we did with σ_f.

Let $G_1 = \text{image } \sigma_f$, $G_2 = \text{image } \sigma_{f^{-1}}$. We want to show $W_1 = G_1$, $W_2 = G_2$. By their invariance it is clear that $G_1 \subset W_1$, $G_2 \subset W_2$. We write $\sigma_f(x) = (x, s_f(x))$, $\sigma_{f^{-1}}(y) = (s_{f^{-1}}(y), y)$.

For $z, z' \in E$, we have the obvious inequalities

$$(1) \qquad |f_1 z - f_1 z'| \ge (\alpha^{-1} - \varepsilon)|x - x'| - \varepsilon|z - z'|$$

$$(2) \qquad |f_2 z - f_2 z'| \le (k+\varepsilon)|y - y'| + \varepsilon|z - z'|$$

By (1) we have, for any $z = (x,y) \in E$ and $z' = (x', y) = \sigma_{f^{-1}}y$

$$|f_1z - s_{f^{-1}}(f_2z)| \geq |f_1z - f_1z'| - |f_1z' - s_{f^{-1}}(f_2z)|$$

$$(3) \qquad \geq (\alpha^{-1}-\varepsilon)|x-x'| - \varepsilon|z-z'| - L(\sigma_{f^{-1}})|f_2z' - f_2z|$$

$$\geq (\alpha^{-1}-3\varepsilon)|x-x'| = (\alpha^{-1}-3\varepsilon)|x - s_{f^{-1}}y| \ .$$

This means that fz can be no closer to G_2 in the E_1-direction than $(\alpha^{-1}-3\varepsilon)$ times its original distance to G_2 in the E_1-direction. Iteration yields: the distance of f^nz to G_2 in the E_1-direction is at least $(\alpha^{-1}-3\varepsilon)^n|x - s_{f^{-1}}y|$.

Now suppose $z \in W_2 - G_2$. Then $f^nz \in S_2$ for all $n \geq 0$, and so

$$|f_1^nz| \geq |f_1^nz - s_{f^{-1}}(f_2^nz)| - |s_{f^{-1}}(f_2^nz)|$$

$$\geq (\alpha^{-1}-3\varepsilon)^n|x - s_{f^{-1}}y| - |f_2^nz| \ .$$

But $|f_2^nz| = |f_2(f_1^{n-1}z, f_2^{n-1}z)| \leq (k+\varepsilon)|f^{n-1}z|$ since $f^{n-1}z \in S_2$. By iteration, $|f_2^nz| \leq (k+\varepsilon)^n|z|$ for $z \in W_2$. Hence

$$\frac{|f_1^nz|}{|f_2^nz|} \geq \frac{(\alpha^{-1}-3\varepsilon)^n|x - s_{f^{-1}}x|}{(k+\varepsilon)^n|z|} - 1 \ .$$

But $(\alpha^{-1}-3\varepsilon)^n/(k+\varepsilon)^n \to \infty$ as $n \to \infty$, which contradicts the assumption $f^nz \in S_2$ for all $n \geq 0$. Hence $W_2 = G_2$.

Similar to (3) we have

$$(4) \qquad |y_{-n} - s_fx_{-n}| \geq (k+\varepsilon)^{-n}|y - s_fx|$$

if $f^n(z_{-n}) = z$, $z_{-n} = (x_{-n}, y_{-n})$. This means that f^{-n} drives z off G_1 by a factor $(k+\varepsilon)^{-n}$ when distance is measured in the E_2-direction.

Next suppose $z \in W_1 - G_1$. Then high inverse iterates of z can be found in S_1: for all $n \geq 0$ there exists $f^{-n}z = z_{-n} = (x_{-n}, y_{-n}) \in S_1$. Since $z_{-n} \in S_1$, $|x| = |f_1^n(z_{-n})| = |f_1(f_1^{n-1}z_{-n}, f_2^{n-1}z_{-n})| \geq (\alpha^{-1}-\varepsilon)|f_1^{n-1}(z_{-n})| \geq \cdots \geq (\alpha^{-1}-\varepsilon)^n|x_{-n}|$ so that

$$|x_{-n}| \leq (\alpha^{-1}-\varepsilon)^{-n}|x| \ .$$

By (2) and (4) we have

$$\frac{|y_{-n}|}{|x_{-n}|} \geq \frac{|y_{-n} - s_f x_{-n}| - |s_f x_{-n}|}{|x_{-n}|} \geq \frac{(k+\varepsilon)^{-n}|y - s_f x|}{|x_{-n}|} - 1$$

$$\geq \frac{(\alpha^{-1}-\varepsilon)^n}{(k+\varepsilon)^n} \frac{|y - s_f x|}{|x|} - 1$$

which tends to ∞ as $n \to \infty$, contradicting the assumption that $z_{-n} \in S_1$. Hence $W_1 = G_1$.

Any $z \in W_1$ clearly satisfies the characterization: $f^{-n}z/\rho^{-n} \to 0$ for some sequence of inverse iterates, namely those in W_1. Similarly $z \in W_2$ implies $|f^n z|/\rho^n \to 0$ as $n \to \infty$.

If $z \in E - W_2$ then $f^n z \in S_1$ for some $n \geq 0$. For all $m \geq n$, $f^m z$ stays in S_1 and $|f_1^m z| \geq (\alpha^{-1}-\varepsilon)^{m-n}|f_1^n z|$. Hence $|f^m z|/\rho^m \to \infty$ as $m \to \infty$.

If $z \in E - W_1$ then there exists $n \geq 0$ such that $f^{-n}z \subset S_2$. The set $f^{-n}z$ is closed and does not contain 0, so $s = \inf\{|y'|: (x',y') \in f^{-n}z\} > 0$. For any $z' \in f^{-n}z$, $f^{-m}z' \subset S_2$ and $|f^{-m}z'|/\rho^{-m} \geq (k+\varepsilon)^{-m}s/\rho^{-m}$ so that $|f^{-m}z|/\rho^{-m} \to \infty$ uniformly as $m \to \infty$. This completes the characterizations of W_1, W_2. Q.E.D.

(5.3) *COROLLARY. If* $(Df)_0 = T$ *then* W_1 *is tangent to* E_1, W_2 *to* E_2.

Proof. Jf, Jf^{-1} leave the jet $j = 0$ invariant at 0. Q.E.D.

(5.4) *(Strong Manifolds) COROLLARY. Suppose* $\alpha < 1$, f *is defined in* $E(s)$, $s > 0$, f *is* C^r, $1 \leq r \leq \infty$, $f(0) = 0$, *and* $L(f-T) \leq \varepsilon$ *is small (as in (5.1)); then* $W_1 = \bigcap_{n\geq 0} f^n S_1$ *is the graph of a* C^r *map* $E_1(s) \to E_2(s)$ *and is locally unique (see below).* W_1 *is characterized as in (5.1). Similarly for* W_2, *if* $k < 1$.

Proof. If $\alpha < 1$ then the graph transform $f_\#$ is defined as before and sends $\Sigma_1 = \{\sigma \in \Sigma(E_1(s),E_2(s)): \sigma(0) = 0 \text{ and } L(\sigma) \leq 1\}$ into itself contractively respecting the metric $\| \|_*$. The fixed section is C^r since $k\alpha^j < 1$, $1 \leq j \leq r$. This completes the proof of (5.4). Q.E.D.

Remark. If there were a way to extend f to all of E as a C^r function near T, then we could deduce (5.4) from (5.1) instead of from its proof. For $\bigcap_{n\geq 0} \tilde{f}^n S_1 \cap E(s) = \bigcap_{n\geq 0} f^n(S_1 \cap E(s))$ where $\alpha < 1$ and $\tilde{f}$ is such an extension of f. Local uniqueness means that any other f-invariant manifold through 0 is contained

in W_1. For $\alpha < 1$, characterization of W_1 in (5.1) demonstrates its local uniqueness. Similar remarks hold when $k < 1$.

To describe the strong stable manifolds we introduce some ideas more fully exploited in §§6, 6B, and [24]. M is a smooth Riemann manifold and $\Lambda \subset M$ is compact.

Definition. A C^r *pre-lamination* indexed by Λ is a continuous choice of a C^r embedded disc $\mathcal{D}_p$ through each $p \in \Lambda$.

Continuity means that Λ is covered by open sets U in which $p \mapsto \mathcal{D}_p$ is given by

$$\mathcal{D}_p = \sigma(p)(D^k)$$

where $\sigma: U \cap \Lambda \to \mathrm{Emb}^r(D^k, M)$ is a continuous section. The bundle $\mathrm{Emb}^r(D^k, M)$ is a C^r fiber bundle over M, the projection being $\beta \mapsto \beta(0)$. Thus $\sigma(p)(0) = p$, $p \in \Lambda$.

Definition. If in addition to continuity of $p \mapsto \mathcal{D}_p$, these sections σ have C^s evaluations, $(p,x) \mapsto \sigma(p)(x)$, then the pre-lamination is of *class* C^s, $1 \leq s \leq r$, and can legitimately be called a C^s *pre-foliation.*

Definition. A pre-lamination is *self coherent* if and only if the interiors of each pair of its discs $\mathcal{D}_p$, $\mathcal{D}_q$ meet in a relatively open subset of each.

Definition. Two points $p, q \in M$ are *forward* ρ*-asymptotic* under a homeomorphism f of M if and only if $d(f^n p, f^n q) \leq C\rho^n$ for all $n \geq 0$ and some constant C. Similarly, for *backward* ρ*-asymptotic*.

(5.5) *THEOREM. If* f *is a* C^r *endomorphism of* M *with* ρ*-pseudo hyperbolic set* Λ, $T_\Lambda M = E_1 \oplus E_2$, *then there are locally* f*-invariant* C^1 *pre-laminations* $\{W_i(p)\}_{p\in\Lambda}$ *tangent to* E_{ip} *at* p, $i = 1, 2$. *If* $\rho \geq 1$ *then* $\{W_1(p)\}_{p\in\Lambda}$ *is a self coherent* C^r *pre-lamination and* $W_1(p)$ *is characterized as those points locally backward* ρ*-asymptotic with* p. *If* $\rho \leq 1$ *then* $\{W_2(p)\}_{p\in\Lambda}$ *is a self coherent* C^r *pre-lamination and* $W_2(p)$ *is characterized as those points locally forward* ρ*-asymptotic with* p.

Proof. $Tf: T_\Lambda M \to T_\Lambda M$ is a bundle endomorphism covering the homeomorphism $h = f|\Lambda$ and $E_1 \oplus E_2$ is the splitting of $T_\Lambda M$. Lift f by the exponential map, to a map $\tilde{f}$ sending a neighborhood of 0 in $T_\Lambda M$ into $T_\Lambda M$:

$$\exp_{fp}^{-1}\circ f\circ \exp_p = \tilde{f}|T_pM \qquad p\in\Lambda \ .$$

Since it also covers h, the map $\tilde{f}$ can be extended to all of $T_\Lambda M$ by using a smooth bump function on $T_\Lambda M$ and averaging $\tilde{f}$ with Tf. We still call this map $\tilde{f}$:

$$\begin{array}{ccc} T_\Lambda M & \xrightarrow{\tilde{f},Tf} & T_\Lambda M \\ \downarrow & & \downarrow \\ \Lambda & \xrightarrow{h} & \Lambda \end{array} \ .$$

Observe that $\sup_{p\in\Lambda} L((\tilde{f}-Tf)|T_pM)$ can be forced as small as desired by restricting $\tilde{f}$ to a smaller neighborhood of 0 before averaging with Tf. If Λ is one point we have exactly the hypotheses of (5.1,3) so the theorem is proved then.

For the general Λ there are two ways to proceed. The first is to reexamine the proof of (5.1) with the parameter $p\in\Lambda$ added. The space of sections to consider is

$$\Sigma_0(1) = \{\sigma\in\Sigma(E_1,E):\ \sigma(0)=0,\ L(\sigma|E_{1p})\le 1\}$$

where $E = T_\Lambda M$ is considered as a bundle over E_1 by projecting each fiber $E(p)$ onto $E_1(p)$ along $E_2(p)$. The metric on Σ is $\|\sigma-\sigma'\|_* = \sup_p \sup_{x\neq 0} |\sigma x - \sigma' x|/|x|$, where $x\in E_1(p)$. Exactly the same estimates as in (5.1) show that $\tilde{f}$ induces a contraction $\tilde{f}_\#$ of $\Sigma_0(1)$ under the metric $\|\ \|_*$. The fixed section is $\sigma_{\tilde{f}}$. The closed subspace of sections σ which depend continuously on $p\in\Lambda$ is carried into itself by $\tilde{f}_\#$ so $\sigma_{\tilde{f}}$ depends continuously on $p\in\Lambda$. Similarly, $\sigma_{\tilde{f}}$ is C^1 on each $E_1(p)$, its derivative depends continuously on p, and equals 0 at p by (5.3,4). This gives an $\tilde{f}$-invariant family of plaques $\{W_1p\}_{p\in\Lambda}$ in $T_\Lambda M$. Their exponential images, $\{W_1p\}_{p\in\Lambda}$, are locally f-invariant, C^1, and their derivatives are continuous. Compactness of Λ and continuity of $\sigma_{\tilde{f}}$ imply that $\{W_1(p)\}_{p\in\Lambda}$ is C^1 precompact. Similarly for $\{W_2p\}_{p\in\Lambda}$. Local uniqueness, characterization, and higher differentiability of the "plaques" $\{W_1(p)\}_{p\in\Lambda}$ or $\{W_2(p)\}_{p\in\Lambda}$, are given by the corresponding properties for $\tilde{f}$ and hence by (5.4) when $\rho\ge 1$ or ≤ 1.

By the characterization of $W_1(p)$ as those points locally backward ρ-asymptotic with p, $(\rho\ge 1)$, it follows easily that $\{W_1(p)\}$ is self coherent.

If we adopt the more general definition of ρ-pseudo hyperbolic set that

$$m(Tf|E_{1x}) > \rho_x > \|Tf|E_{2x}\|$$

(which might be called "immediate relative ρ-pseudo hyperbolicity") for some continuous function ρ_x on Λ, then this proof of (5.5) goes through with change. The one explained next does not.

The second way to proceed is to consider the map $\tilde{f}_\#$ induced on the space of bounded sections $s: \Lambda \to T_\Lambda M$, $\tilde{f}_\#(s) = f \circ s \circ h^{-1}$. The map $\tilde{f}_\#$ is seen to be a ρ-pseudo hyperbolic endomorphism of $\Sigma^b(T_\Lambda M)$. Its pseudo unstable and stable manifolds $\mathcal{W}_1$, $\mathcal{W}_2$, give rise to $\{\tilde{W}_1 p\}$, $\{\tilde{W}_2 p\}$ as

$$\tilde{W}_j p = ev_p(\mathcal{W}_j) = \{sp: s \in \mathcal{W}_j\} \qquad j = 1, 2 .$$

The $\{\tilde{W}_1 p\}$, $\{\tilde{W}_2 p\}$ give rise to the $\{W_1 p\}_{p\in\Lambda}$, $\{W_2 p\}_{p\in\Lambda}$ by exponentiation, as above. This proof is similar to that in [22]. Q.E.D.

(5.6) *COROLLARY. If* f *is a diffeomorphism of* M, *r-normally hyperbolic at* V, $T_V M = N^u \oplus TV \oplus N^s$, *and* W^s *is the stable manifold of* V, *then* W^s *has an* f*-invariant fibration* $\{W^{ss}p: p \in V\}$ *over* V *whose fibers are tangent to* N^s *at* V *and form a self coherent* C^r *plaque family. Points of* $W^{ss}p$ *are characterized by* $\lim_{n\to\infty} [d(f^n y, f^n p)/m(V_p f^n)] = 0$. *If* f' *is* C^r *near* f *then the plaque family* $W^s(f')$ *is near* $W^s(f)$. *Similarly for* $\{W^{uu}p: p \in V\}$ *fibering* W^u.

Proof. $f|W^s$ satisfies the hypotheses Theorem 5.5. The resulting locally f-invariant self coherent C^r plaque family tangent to N^s at V, $\{W^{ss}p: p \in V\}$, is locally unique since $k < 1$. Two fibers $W^{ss}p$, $W^{ss}q$, cannot cross because of their characterizations and the fact the point $q \in V$ can be asymptotic with p no faster than $m(V_p f^n)$. By invariance of domain, the $\{W^{ss}p: p \in V\}$ fill out a neighborhood of V in W^s. Continuous dependence is easy to verify. Q.E.D.

When V was normally hyperbolic, the plaque families $\{W^{uu}_\varepsilon(p)\}_{p\in V}$, $\{W^{ss}_\varepsilon(p)\}_{p\in V}$ existed by (5.4) without previously constructing W^u_ε, W^s_ε. Thus, we could construct W^u_ε by setting it equal to $\bigcup_{p\in V} W^{uu}_\varepsilon(p)$. Smoothness of W^u_ε and permanence under perturbations then become a problem. However, we can show directly

(5.7) *PROPOSITION.* $\check{W}^u_\varepsilon = \bigcup_{p\in V} W^{uu}_\varepsilon(p)$ *is a Lipschitz submanifold.*

Proof. Let X be a C^1 manifold through V nearly tangent at V to $N^u \oplus TV$. Let E be a C^1 subbundle of $T_X M$ whose exponential image gives a tubular neighborhood of X in M and whose fibers at V are nearly equal to N^s. We can assume E is trivial without loss of generality. We claim $\check{W}^u_\varepsilon$ is the image of a Lipschitz section of E. Since the fibers W^{uu} are tangent to N^u at V it is easy to see that $\pi: E \to X$ projects $\check{W}^u$ onto a neighborhood of V in X. Suppose

that there exist points

$$z \in W^{uu}_{\varepsilon}(p) \qquad z' \in W^{uu}_{\varepsilon}(p')$$

whose vertical distance apart in E (we are using triviality of E to speak of this, since z, z' are in different fibers) is $\geq$ their horizontal distance apart -- i.e. $z = (x,y)$, $z' = (x,y')$,

$$|y-y'| \geq d_X(x,x')$$

and that this happens for z, z' very close together and ε very small. Apply f^{-n} to these points and observe that the horizontal distance apart cannot expand as fast as the vertical distance must expand (by normal hyperbolicity). Likewise $f^{-n}z$, $f^{-n}z$ must lie very near V and $f^{-n}p$, $f^{-n}p'$ must not be very far apart. See the figure below.

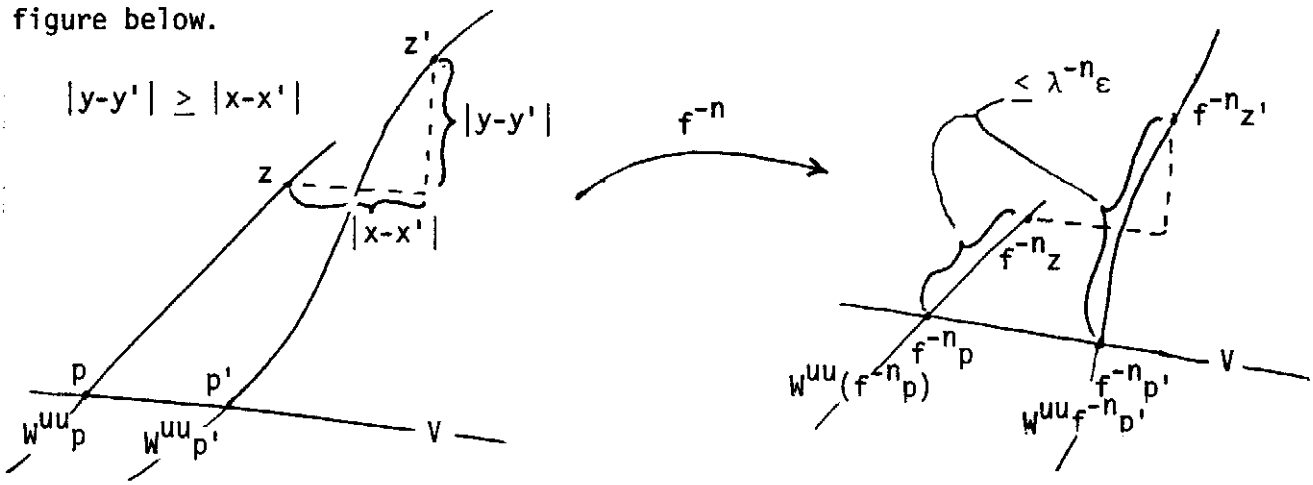

This is incompatible with the $\{W^{uu}_{\varepsilon}(p)\}$ being uniformly tangent to N^u at V.

Since such z, z' cannot occur, $\tilde{W}^u$ is the image of a Lipschitz section of E near V. Q.E.D.

Once $\tilde{W}^u$ is known to be Lipschitz the C^r section theorem easily proves it to be C^r. *Note. The defect of this construction is that it doesn't naturally provide a* W^u *for a perturbation of* f.

§5A. Center Manifolds. Here we show how some theorems on center manifolds follow from our methods. Note that our theory of smoothness is easier than the classical one [20,28].

Suppose that the spectrum of $T: E \to E$ is contained in $A_1 \cup A_2$ where

$$A_1 = \{z \in \mathbb{C}: |z| \geq 1\} \qquad A_2 = \{z \in \mathbb{C}: |z| \leq a\} \qquad a < 1 .$$

Let $E_1 \oplus E_2$ be the corresponding T-invariant splitting. This is the limiting case of ρ-pseudo hyperbolicity as $\rho \to 1$ from below. As in §5, let $S_1 = \{(x,y) \in (E_1 \times E_2): |x| \geq |y|\}$.

(5A.1) *THEOREM. If* $f: E \to E$ *is* C^r, $1 \leq r < \infty$, $f(0) = 0$, *and* $L(f-T) \leq \varepsilon$ *is small then* $W_1 = \bigcap_{n \geq 0} f^n S_1$ *is the graph of a* C^r *function* $E_1 \to E_2$.

Proof. For any ρ, $a < \rho < 1$, T is ρ-pseudo hyperbolic with the same splitting. We can choose norms on E_1, E_2 so that $\|T_2\|\|T_1^{-1}\|^j < 1$, $0 \leq j \leq r$ because r is fixed. (The higher r is, the more this requirement may distort the norms.) We can require ε so small that $k\alpha^j < 1$, $0 \leq j \leq r$ where $k = \sup \|\partial f_2/\partial y\|$, $\alpha = \sup \|(\partial f_1/\partial x)^{-1}\|$ as usual. Then the same remarks as in the proof of (5.6) apply. Q.E.D.

The manifold W_1 is called the *center unstable manifold*, W^{cu}. Although globally unique and characterized by (5.1) it is not locally unique without further assumptions [28].

Definition. A map $f: X \to X$ is *Lyapunov unstable* at a fixed point $0 \in X$ if and only if for every neighborhood U of 0 there exists another neighborhood $V \subset U$ of 0 such that $f^n(X-U) \cap V = \emptyset$, for all $n \geq 0$.

This means that points off U cannot penetrate into V under forward iterates of f, or to put it the other way, points of V cannot escape U under inverse iterates of f. If 0 is a uniformly repellant fixed point then it is Lyapunov unstable.

Definition. A map $f: X \to X$ is *Lyapunov stable* at the fixed point 0 if and only if for every neighborhood U of 0 there exists another neighborhood $V \subset U$ of 0 such that $f^n V \subset U$ for all $n \geq 0$.

This means points of V cannot escape U under forward iterates of f.

(5A.2) *LEMMA. Lyapunov stability or instability at* 0 *is equivalent to the existence of arbitrarily small neighborhoods of* 0 *invariant under* f *or* f^{-1} *respectively:* $f\mathcal{O} \subset \mathcal{O}$, $f^{-1}\mathcal{O} \subset \mathcal{O}$.

Proof. If such $\mathcal{O}$ exists f is obviously Lyapunov stable or unstable at 0. If f is Lyapunov unstable at 0 then $\mathcal{O} = \bigcup_{n \geq 0} f^{-n} V \subset U$, where U and V are as in the definition, obviously suffice. Similarly for Lyapunov stability. Q.E.D.

(5A.3) *THEOREM. If* $E = R^m$, T *is an isomorphism of* $\mathbb{R}^m$, *and* $f|W^{cu}$ *is Lyapunov unstable at* 0, *then* W^{cu} *is locally unique in the sense that if* W *is an* f^{-1} *invariant set containing* 0 *and lying in* S_1 *near* 0, *then* $W \subset W^{cu}$ *near* 0; *that is, for some* $s > 0$, $E(s) \cap W \subset W^{cu}$.

Remark 1. A paraphrase of (5A.3) is: locally f-invariant sets in S_1 are in W^{cu}.

Remark 2. It is not necessary to assume that T is an isomorphism. When T has a kernel the proof involves a generalization of (5.6) to the case of normal pseudo hyperbolicity wherein $N^s f$ can have a kernel. To avoid trivial counter-examples the uniqueness assertion must be changed to: $W \subset W^{cu}$ for any f^{-1} invariant set W such that $W \cap E_1(s) \times E_2 \subset S_1$.

Remark 3. A counterexample to certain generalizations is given by a map f locally of the form $f(x,y) = (x-\varepsilon y, ky)$ where $0 < k < 1$ and ε is small. $f|W^{cu} \equiv f(x,0) \equiv (x,0)$ so Lyapunov instability occurs. There are smooth f^{-1} invariant arcs γ which contain 0 and lie in S_1 near 0. They are only *locally* contained in W^{cu}. The degree of locality involved is dependent on γ. See the figure below.

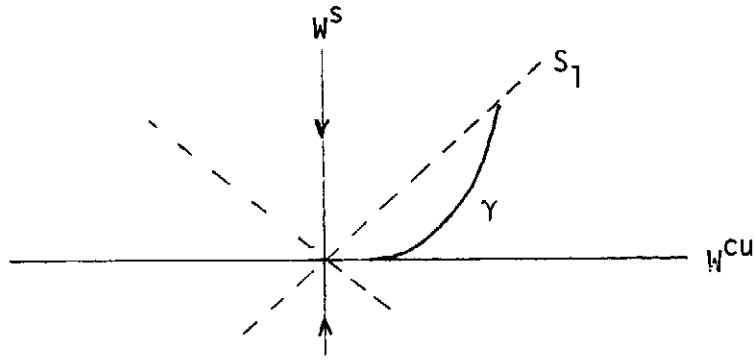

Remark 4. The manifold W^{cu} is maximal among f^{-1}-invariant manifolds lying in S_1, but this is a global property already evident in (5.1). The assumption of Lyapunov instability in (5A.3) forces this global phenomenon to occur locally.

Proof of (5A.3). It is easily seen that f is uniformly normally hyperbolic at W^{cu}, and so by (5.6) there is an f-invariant fibration of a neighborhood U of W^{cu} in R^m, $\{W^{ss}p\}_{p \in W^{cu}}$. Let W be an f^{-1}-invariant set with $0 \in W \cap E(s) \subset S_1$. Choose s smaller if necessary to get $E(s) \subset U$. Let $\mathcal{O}$ be a neighborhood of 0 in W^{cu} such that $f^{-n}\mathcal{O} \subset \mathcal{O}$ for all $n \geq 0$. Choose $\mathcal{O}$ so small that if $z \notin E(s)$ then $fz \notin W^{ss}p \cap S_1$ for any $p \in \mathcal{O}$. Such an $\mathcal{O}$ exists by (5A.2). The set $\{W^{ss}p\colon p \in \mathcal{O}\}$ is a neighborhood of 0 in R^m and we claim that its intersection with W lies in W^{cu}. This will prove the theorem.

For any $z \in W^{ss}p$, $p \in \mathcal{O}$, and $z \in W$ the inverse iterates $f^{-n}z$ are forced away from W^{cu} by a factor $(k+\varepsilon)^{-n}$ and the fibration $\{W^{ss}p\}$ is f^{-n} invariant. The base point of the fiber in which $f^{-n}z$ lies, $f^{-n}p$, cannot escape $\mathcal{O}$. So some $f^{-n}z$ first fails to lie in S_1, but it does lie in $W^{ss}(f^{-n}p) \cap E(s)$ by our small choice of $\mathcal{O}$. Hence $W \cap E(s) \not\subset S_1$, contradicting our assumption on W. Q.E.D.

For the center stable manifold there is a corresponding theorem if T is an isomorphism, by consideration of f^{-1}. The center manifold W^c is the transverse intersection of the center unstable and center stable manifolds. Thus, it exists and is of class C^r. Although W^c is not unique, Takens showed that $f|W^c$ is conjugate to $f|W^{c'}$ for any two center manifolds W^c, $W^{c'}$ [49].

Even if T has a kernel, we can proceed as follows. The center stable manifold $\bigcap_{n\geq 0} f^{-n}S_2$ is the graph of a C^r map $E_2 \to E_1$ by the same reasoning as (5A.1). When $E = R^m$ the spectrum of T is finite and so its nonzero part can be separated from 0 by a circle, say of radius ρ. This means that there is a T-invariant splitting $E_0 \oplus \bar{E}$ such that kernel$(T) = E_0$, $T|\bar{E}$ is an automorphism of $\bar{E}$. Corresponding to this splitting is a C^1 manifold $\bar{W} = \bigcap_{n\geq 0} f^n\bar{S}$ where $\bar{S} = \{(x_0,\bar{y}): x_0 \in E, \bar{y} \in \bar{E}, |x_0| \leq |\bar{y}|\}$ by (5.1). Let $W = W^{cs} \cap \bar{W}$. Then $f|W$ is a diffeomorphism of W onto itself and f is normally pseudo hyperbolic to W. (The normal derivative to W at 0 is zero in the E_0 direction and a sharp expansion in the E_1 direction.) By the generalization of (5.6) spoken of in Remark 2 (5A.3), W has pseudo stable and pseudo unstable f^{-1}-invariant manifolds W^0 and W^u. Each has an f^{-1}-invariant fibration, $\{W^{00}p: p \in W\}$, $\{W^{uu}p: P \in W\}$ respectively. By techniques similar to those of [41] we can extend the fibration $\{W^{uu}\}$ to cover an entire neighborhood of W in an f^{-1}-invariant fashion. Then the same proof as (5A.3) shows that W^{cs} is locally unique in case $f|W^{cs}$ is Lyapunov stable.

§6. <u>Noncompactness and Uniformity</u>. In this section we permit V, the f-invariant manifold to be noncompact. We have in mind V = a leaf of an f-invariant foliation. Our intention is to construct W^uV, W^sV in a way which works not only for f but also for f' near f, as in §4. This will yield an f'-invariant V' near V. General, simple assumptions about f do not seem to prevent W^uV, W^sV, and V' from having self intersections, even though V does not. Therefore it seems reasonable to let V be an "immersed leaf" in the first place.

Definition. A C^r immersion of one manifold into another, $r \geq 1$, $h: N \to M$, is *uniformly r-self tangent* if and only if $T^r h(T^r N)$ extends to a continuous subbundle of $T^r M$ over $\overline{h(N)}$.

In particular, this means that self-intersections, $h(x) = h(x')$, are r-th order tangent, $T^r_x h(T^r_x N) = T^r_{x'}(T^r_{x'} N)$.

Definition. A C^r *leaf immersion* is a uniformly r-self-tangent immersion, $h: N \to M$, such that $\overline{h(N)}$ is compact, $\overline{h(N)}$ is disjoint from ∂M, and N is complete respecting the pull-back of a Finsler on M. A leaf immersion is *boundaryless* if $\partial N = \emptyset$.

A *Finsler* on M is a norm on each tangent space $T_p M$ depending continuously on $p \in M$. Its *pull-back* to N is $|\cdot|_x = |Th(\cdot)|_p$ for $x \in N$, $p = h(x)$. Since $\overline{h(N)}$ is compact, completeness of N is independent of which Finsler we put on M. Likewise, it is no loss of generality to assume M is compact.

Standing Hypothesis on M *and* V. M is a C^∞, boundaryless, Riemann manifold, V is a C^∞ manifold, and $i: V \to M$ is a boundaryless leaf immersion. We shall refer to the extended tangent bundle $\overline{Ti(TV)}$ as $\bar{T}$. Thus, $\bar{T}$ is a continuous v-plane subbundle of $T_{\overline{i(V)}}M$.

Let us remark right away that our interest in V = a leaf of a foliation prohibits us from considering a Whitney topology to handle the noncompactness of V. We must rely on topologies compatible with those of M.

Example 1. V is compact and i is an embedding. This is what we considered in §§1-4.

Example 2. $V = \mathbb{R}$, $M = T^2 = \mathbb{R}^2/\mathbb{Z}^2$ and $i: V \to M$ is the isometric immersion onto the line of slope $\frac{1}{2}(\sqrt{5} - 1)$ through 0. Thus $i(V)$ is dense in M and is invariant by the linear Anosov diffeomorphism $\begin{bmatrix} 2 & 1 \\ 1 & 1 \end{bmatrix}$. See [5]. Since $Ti(TV)$ is constant, it extends continuously to $\overline{i(V)} = T^2$.

Example 2'. V = uncountably many copies of $\mathbb{R}$ and $i: V \to M = T^2$ is the isometric immersion onto all the lines of slope $\frac{1}{2}(\sqrt{5} - 1)$. In the same vein V could be the nonseparable 1-manifold of all orbits of an Anosov flow.

Example 3. $V = \mathbb{R}$, $M = S^2$ and f is the time one map of the flow pictured in the figure below.

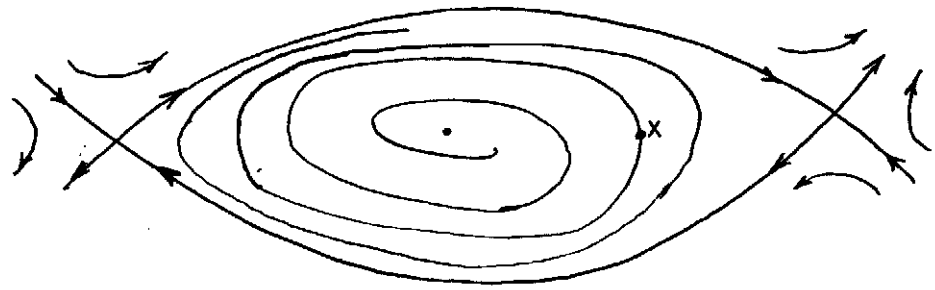

Then i is to be an isometric immersion of $\mathbb{R}$ onto the orbit through x. Although the tangent bundle $Ti(TV)$ is continuous it is not uniformly continuous, and so $i: \mathbb{R} \to S^2$ is *not* a leaf immersion.

Example 4. If F is a C^r foliation of M, then the inclusion of any of its leaves is a C^r leaf immersion.

Example 5. Even if i is a C^∞ leaf immersion, $\bar{T} = \overline{Ti(TV)}$ need not be a C^1 subbundle. For instance take $i: S^1 \to \mathbb{R}^2$ where $i(S^1)$ is a figure 8 with infinite order tangency at the self intersection. $\bar{T}$ cannot be C^1 because this would deny unique foliations to C^1 fields.

Definition. A C^r diffeomorphism $f: M \to M$ is *r-normally hyperbolic to a* C^1 *leaf immersion* $i: V \to M$ if and only if

(1) $f(iV) = iV$

(2) f pulls back to a diffeomorphism i^*f of V so that the diagram

$$\begin{array}{ccc} V & \xrightarrow{i} & M \\ \downarrow{\scriptstyle i^*f} & & \downarrow{\scriptstyle f} \\ V & \xrightarrow{i} & M \end{array}$$

commutes.

(3) There are a Finsler on TM and a Tf-invariant splitting $T_{\overline{iV}}M = N^u \oplus \bar{T} \oplus N^s$ where $\bar{T} = \overline{Ti(TV)}$ such that

$$m(N^u_p f) > \|\bar{T}_p f\|^k \qquad\qquad \|N^s_p f\| < m(\bar{T}_p f)^k$$

for all $p \in \overline{iV}$, $0 \leq k \leq r$. We call such a Finsler *adapted to* f *at* i.

If i is a 1-1 immersion then (2) is automatic, otherwise not -- as is shown by the leaf immersion $i: S^1 \to \mathbb{R}^2$ in the figure below.

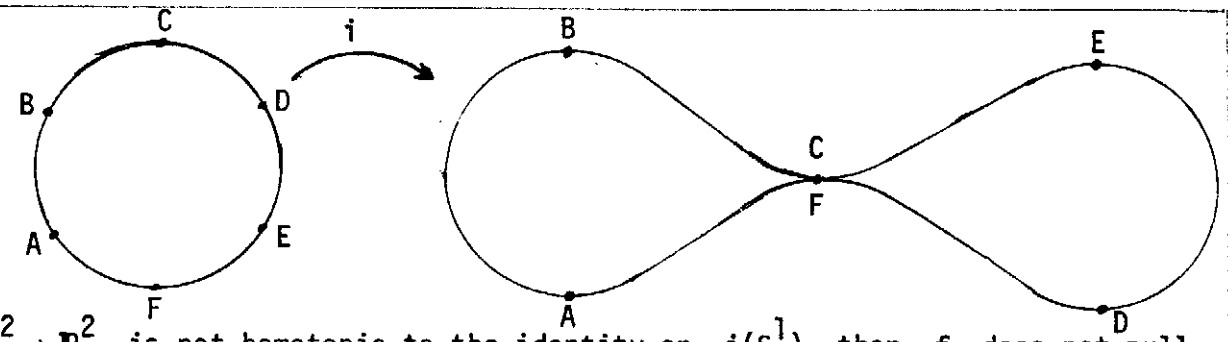

If $f: \mathbb{R}^2 \to \mathbb{R}^2$ is not homotopic to the identity on $i(S^1)$ then f does not pull back to a diffeomorphism of S^1.

Question. If i is a leaf immersion and f is a diffeomorphism of M with $f(iV) = iV$ can i be replaced by i' such that f pulls back via i' to V?

Let $i: V \to M$ be a C^r boundaryless leaf immersion at which f is normally hyperbolic. Let us call $\overline{i(V)} = \Lambda$, a compact f-invariant set. Eventually, in §6B, we shall show that Λ has a "branched lamination" -- $i(V)$ being one of the branched laminae.

Let η be a C^∞ subbundle of $T_\Lambda M$ such that $\bar{T} \oplus \eta = T_\Lambda M$. This defines a C^r bundle over V, $i^*\eta$, the formal normal bundle of i:

$$\begin{array}{ccc} i^*\eta & \xrightarrow{i^*} & \eta \\ \downarrow{\scriptstyle \text{proj.}} & & \downarrow{\scriptstyle \text{proj.}} \\ V & \xrightarrow{i} & iV \end{array}$$

On each fiber i_* is an isomorphism. As we shall see, there is an $\varepsilon > 0$ such that i^*f extends uniquely to $i^*\eta(\varepsilon)$.

$$\begin{array}{ccc} i^*\eta(\varepsilon) & \overset{i^*f}{\dashrightarrow} & i^*\eta \\ \downarrow{\scriptstyle \exp\circ i_*} & & \downarrow{\scriptstyle \exp\circ i_*} \\ M & \xrightarrow{f} & M \end{array}$$

The dashed map i^*f is the representation of f in the tubular neighborhood of i. (By $i^*\eta(\varepsilon)$ we mean the i^* pull-back of the ε-disc bundle $\eta(\varepsilon)$.)

Since Tf is r-hyperbolic over $\bar{T}$ at Λ we have

$$T_\Lambda M = N^u \oplus \bar{T} \oplus N^s ,$$

a Tf-invariant splitting with the usual properties. Since we want η to be smooth,

we can't force η to equal $N = N^u \oplus N^s$, but it can be as close as we choose. In any case $T(i^*f)$ leaves $i^*N^u \oplus i^*\bar{T} \oplus i^*N^s$ invariant at V and is, under the pull-back metric, r-hyperbolic over $i^*\bar{T} = TV$ = the tangent bundle to the zero section of $i^*\eta$. (Note that, as for any vector bundle, $T_p(i^*\eta) = T_pV \oplus (i^*\eta)_p$ for any p in the base V.)

Now we are ready to state our generalization of (4.1).

(6.1) *THEOREM. Let* f *be a* C^r, $r \geq 1$, *diffeomorphism of* M *which is* r-*normally hyperbolic at the* C^r *boundaryless leaf immersion* i. *Let* η *be a* C^∞ *subbundle of* $T_\Lambda M$ *complementary to* $\bar{T}$ *where* $\Lambda = \overline{i(V)}$, $\bar{T} = \overline{Ti(TV)}$. *If* $\varepsilon > 0$ *is small enough then* $i^*f|i^*\eta(\varepsilon)$ *exists and has properties (a)-(h) of Theorem 4.1:*

(a) <u>*Existence:*</u> *Through* V *in* $i^*\eta(\varepsilon)$ *there exists manifolds* W^u, W^s *with* $(i^*f)W^u \subset W^u$, $i^*f(W^s) \subset W^s$, ∂W^u *and* $\partial W^s \subset i^*\partial\eta(\varepsilon)$, *and* $T_V(W^u) = i^*N^u \oplus TV$, $T_V(W^s) = TV \oplus i^*N^s$.

(b) <u>*Uniqueness:*</u> *Any locally invariant set near* V *lies in* $W^u \cup W^s$.

(c) <u>*Characterization:*</u> W^s *consists of all points whose forward* i^*f-*orbits never stray far from* V *and* W^u *of those whose reverse* i^*f-*orbits never stray far from* V.

(d) <u>*Smoothness:*</u> W^u, W^s *are* C^r *and* $\exp\circ i_*|W^u$, $\exp\circ i_*|W^s$ *are* C^r *leaf immersions.*

(e) <u>*Lamination:*</u> W^u *and* W^s *are invariantly fibered by* C^r *discs* W^{uu}_q, W^{ss}_q, $q \in V$, *tangent at* V *to* $i^*N^u_q$, $i^*N^s_q$ *respectively. Points of* W^{ss}_q *are characterized by sharp forward asymptoticity, those of* W^{uu}_q *by sharp reverse asymptoticity. The* $\exp\circ i_*$ *images of the* W^{uu} *fibers are coherent in* M, *and also those of the* W^{ss} *fibers. Coherence means that the interiors of fibers intersect in relatively open subsets.*

(f) <u>*Permanence:*</u> *If* f' *is a* C^r *diffeomorphism of* M *which is* C^r *near then* f' *is* r-*normally hyperbolic at an essentially unique leaf immersion* $i': V \to M$ *and assertions (a)-(e) continue to hold for* (f',i'). *See (6.8) for a more detailed statement of this.*

(g) <u>*Linearization:*</u> *Near* V, i^*f *is topologically conjugate to* $N^*f = i^*(Tf|N^u \oplus N^s)$.

(h) <u>*Flows:*</u> *Similarly for a flow* r-*normally hyperbolic at a leaf immersion.*

Remark. If i is only of class C^1 but f is r-normally hyperbolic at i, $r \geq 2$, then i can be replaced by a C^r leaf immersion $\tilde{i}: V \to M$ of the form $\tilde{i} = i\circ h$ where h is a diffeomorphism $V \to V$ near the identity. The immersed manifolds W^u, W^s, W^{uu}, W^{ss} for i and $\tilde{i}$ are the same. See §6A.

Outline of the rest of §6: In (6.2) we prove that plaques exist. In (6.3,4) we explain how C^r theory reduces to C^{r-1} theory (in the same category) via Grassmannians. In (6.5) we prove a C^1 Section Theorem, over leaf immersions. In (6.6) we force higher differentiability of a leaf immersion (in the normally contracting case). In (6.7) we prove an abstract C^r Section Theorem. Then we prove (6.1). In (6.8) we spell out (6.1f).

To prove (6.1) we found it necessary to work with immersions more general than leaf immersions. Their local structure is given by *plaques* and we call them *plaquated immersions.*

Definition. A C^r *plaque* in a manifold W^w is a C^r embedding of the closed unit w-ball into W, $\rho: B^w \to W^w$. If $w: W \to M$ is a C^r immersion then we say a family of plaques $\{\rho\} = P$ *plaquates* w if

(1) $W = \bigcup_P \rho(\text{Int } B^w)$

(2) $\{w\circ\rho\}_{\rho\in P}$ is precompact in $\text{Emb}^r(B^w,M)$

By abuse of language, we refer equally to ρ, $w\circ\rho$, $\rho(B^w)$, and $w\circ\rho(B^w)$ as plaques. The *center* of ρ is $\rho(0)$.

(6.2) C^r *PLAQUATION THEOREM. Each boundaryless* C^r *leaf immersion* $i: V \to M$ *has a* C^r *plaquation. Each point of* V *is the center of at least one plaque.*

Proof. Let $\bar{T}$ be the extended 1-tangent bundle of i. At each $x \in V$ there is a $\nu = \nu(x) > 0$ so small that the branch of iV through $ix = p$ contains the disc

$$\exp_p(\text{graph } g_x)$$

where $g_x: \bar{T}_p(\nu) \to \bar{T}_p^{\perp}$ is some C^r function with $g_x(0) = 0$, $(Dg_x)_0 = 0$, and $\sup_{|v|\le\nu} \|(Dg_x)_v\| \le 1$. (We are merely saying that each branch of iV is locally flat. By $\bar{T}_p(\nu)$ we mean the vectors in $\bar{T}_p$ of length $\le \nu$ and by $\bar{T}_p^{\perp}$ the orthogonal complement to $\bar{T}_p$ in T_pM.) Let us call such a ν *acceptable* for x. Note that g_x is uniquely determined by i, x, ν.

The main thing to show is that a uniform acceptable $\nu > 0$ can be found for all $x \in V$. Let $\nu_0 > 0$ be small enough so that $\exp|T_pM(\nu_0)$ is injective for all $p \in \overline{iV}$. Let

$$\bar{\nu}(x) = \sup\{\nu \le \nu_0 : \nu \text{ is acceptable for } x\} .$$

Suppose $\bar{\nu}(x_n) \to 0$ for some sequence $\{x_n\}$ in V. Call

$$ix_n = p_n \qquad g_{x_n} = g_n \qquad \bar{\nu}(x_n) = \bar{\nu}_n .$$

Since $\overline{iV}$ is compact, we may assume $p_n \to p \in \overline{iV}$. We know that $\bar{T}_{p_n} \to \bar{T}_p$.

Consider the x_n-branch of iV through p_n, say β_n. It uniquely determines $g_n : \bar{T}_{p_n}(\nu_n) \to \bar{T}^{\perp}_{p_n}$, $\nu_n < \bar{\nu}_n$, such that

$$\exp_{p_n}(\text{graph } g_n) \subset \beta_n \qquad \|(Dg_n)_v\| \leq 1 \qquad \text{for} \qquad |v| \leq \nu_n .$$

g_n extends to a unique C^r function $\hat{g}_n$ on $\bar{T}_{p_n}(\bar{\nu}_n + \varepsilon_n)$ such that $\exp_{p_n}(\text{graph } \hat{g}_n) \subset \beta_n$. For $\partial V = \emptyset$ and V is complete respecting the pull-back Finsler. Thus, $\bar{\nu}_n \to 0$ means

$$\|(Dg_n)_{v_n}\| = 1 \quad \text{for some} \quad v_n \in \bar{T}_{p_n}(\bar{\nu}_n) .$$

But this signifies that $\bar{T}_{p_n}$ and $\bar{T}_{q_n}$ are far apart for $q_n = \exp_{p_n}(v_n + g_n(v_n))$, contradicting continuity of $\bar{T}$.

Having found a uniform acceptable $\nu > 0$ for all the $x \in V$, we pick the natural plaques given by the functions g_x. For each $x \in V$, choose a conformal isomorphism $S_x : \mathbb{R}^W \to \bar{T}_{ix}$ sending B^W to $\bar{T}_{ix}(\nu)$. Define ρ_x by commutativity of

$$\begin{tikzcd}
B^W \arrow[r, "S_x"] \arrow[d, "\rho_x"] & \bar{T}_{ix}(\nu) \arrow[r, "\text{graph } g_x"] & T_{ix}M \arrow[d, "\exp"] \\
W \arrow[rr, "i"] & & M
\end{tikzcd}$$

We claim $\{i \circ \rho_x\}$ is precompact in $\text{Emb}^r(B^W, M)$.

Let $\{x_n\}$ be any sequence in W. It suffices to find a C^r-convergent subsequence of ρ_{x_n}. Let g_n represent the plaque ρ_{x_n} as before. We may assume $p_n = ix_n \to p$ by compactness of $\overline{iV}$.

$\bar{T}^r$ is uniformly continuous on iV since $\overline{iV}$ is compact. $\exp(\text{graph } g_n) \subset iV$. Thus, the r-tangent direction to graph g_n is a uniformly equicontinuous function of $v \in \bar{T}_{p_n}(\nu)$, i.e.

$$v \mapsto (D^k g_n)_v \quad \text{is uniformly equicontinuous} \qquad 0 \le k \le r\ .$$

Unfortunately the g_n are defined on domains which depend on n, namely $\bar{T}_{p_n}(\nu)$, so we can't apply Arzela's Theorem immediately. However, we can choose a "connector" (see [22]) to translate $\bar{T}_p$ to $\bar{T}_{p_n}$ and $\bar{T}_p^{\perp}$ to $\bar{T}_{p_n}^{\perp}$. Call it θ_n. Then

$$\theta_n^{-1} \circ g_n \circ \theta_n | \bar{T}_p$$

is a sequence of maps from $\bar{T}_p(\nu)$ to $\bar{T}_p^{\perp}$ which is uniformly C^r equicontinuous. By Arzela's Theorem, it has C^r-convergent subsequence. The corresponding subsequence of plaques C^r converges in $\mathrm{Emb}^r(B^w, M)$. Q.E.D.

To pursue C^r questions geometrically, $r \ge 2$, we discuss Grassmannians. We view Grassmannianism as compactification of the tangent functor.

The Grassmann space GV of subspaces of a vector space V is a compact smooth manifold. It has one component G^kV for each dimension k, $0 \le k \le \dim V$. Linear maps on vector spaces induce smooth maps on their Grassmannians functorially -- injections induce embeddings, isomorphisms induce diffeomorphisms:

$$V_1 \xrightarrow{A} V_2 \qquad\qquad GV_1 \xrightarrow{G_A} GV_2$$

When ζ is a smooth vector bundle over M, $G\zeta$ is the bundle over M whose fiber at p is $G(\zeta_p)$. Note that $G\zeta$ has compact fibers and is as smooth as ζ. When $\zeta = TM$ we abuse the notation and write $GM = G(TM)$. Thus, G_p^kM = k-planes in T_pM.

A diffeomorphism $f: M \to M$ induces a bundle isomorphism $Tf: TM \to TM$ which induces a Grassmann diffeomorphism $Gf: GM \to GM$; both Tf and Gf cover f.

r-th order properties of f are reflected in (r-1)-st order properties of Tf, obviously. We lose little where passing from Tf to Gf and we gain compactness. This is the usefulness of G.

The following two propositions give natural reformulations of r-normal hyperbolicity in terms of Grassmannians, $r \ge 2$. We are grateful to Ethan Akin for pointing out some errors in previous versions.

(6.3) *PROPOSITION. Let* $w: W \to M$ *be a* C^r *plaquated immersion having plaquation* $P = \{\rho\}$. *If* W_0 *is a* w*-submanifold of* W *contained in* $\bigcup_{\rho \in P} \rho(0)$, w *is*

a C^1 *leaf immersion, and if* $G\omega$ *is a* C^{r-1} *leaf immersion then* $\omega|W_0$ *is a* C^r *leaf immersion,* $r \geq 2$.

Remark. In particular, if $i: V \to M$ is a C^r plaquated boundaryless C^1 leaf immersion then i is a C^r leaf immersion provided Gi is a C^{r-1} leaf immersion.

Proof. Let $\bar{\tau}^{r-1}$ be the extended $(r-1)$-tangent bundle of $G\omega$ and let $\bar{T}$ be the extended 1-tangent bundle of ω_0. Let $\mathcal{B}$ be the closure of $\{\omega\circ\rho: \rho\in\mathcal{P}\}$ in $\mathrm{Emb}^r(B^W,M)$.

For any $p \in \overline{\omega W_0}$ and any plaque $\beta \in \mathcal{B}$ centered at p, set

$$\bar{T}^r_p = T^r_p(\beta) .$$

On any branch of ωW_0, $\bar{T}^r$ is well defined and is its r-tangent bundle. It remains to prove $\bar{T}^r_p$ is well defined on $\overline{\omega W_0}$ and is continuous.

Continuity is easy, modulo well definedness. Let $p_n \to p$ in $\overline{\omega W_0}$ and suppose $T^r_{p_n}(\beta_n) \not\to T^r_p(\beta)$ where β_n and β are plaques in $\mathcal{B}$ centered at p_n and p. We may suppose $\beta_n \to \beta$ in Emb^r by compactness of $\mathcal{B}$, i.e., $T^r_{p_n}\beta_n \to T^r_p\bar{\beta} \neq T^r_p\beta$ contradicting the definition of $\bar{T}^r_p$.

To explain intrinsically how $\bar{\tau}^{r-1}$ specifies $\bar{T}^r$ one needs connections on $T(GM)$, an exponential on $T(GM)$, etc. It is easier to work in a chart.

Fix any $p \in \overline{\omega W_0}$. Choose the M-exponential chart at p and write points in it relative to the product $T_pM = \bar{T}_p(\nu) \times \bar{T}^{\perp}_p(\nu)$. Let β be a plaque of $\mathcal{B}$ centered at p and let $\rho_n \in \mathcal{P}$ have $\omega\circ\rho_n \to \beta$ in Emb^r. Near p, $\omega\circ\rho_n$ and β are given as graphs of maps

$$g_n: \bar{T}_p(\nu) \to \bar{T}^{\perp}_p(\nu) \qquad g: \bar{T}_p(\nu) \to \bar{T}^{\perp}_p(\nu)$$

respectively. Suppose we have a second plaque $\beta' \in \mathcal{B}$ centered at p and a sequence $\rho'_n \in \mathcal{P}$ with $\omega\circ\rho'_n \to \beta'$.

Consider $G(\omega\rho_n)$ and $G(\omega\rho'_n)$. They are plaques in $G(\omega W) \subset GM$. Since $\omega\rho_n \to \beta$, we have $G(\omega\rho_n) \to G\beta$ in $\mathrm{Emb}^{r-1}(B^W,GM)$. Similarly $G(\omega\rho'_n) \to G\beta'$. Consequently, $G\beta$ and $G\beta'$ are $(r-1)$-order tangent at their common center P_p. (We denote $\bar{T}_p$ by P_p when we think of it as a point in GM, by $\bar{T}_p$ when we think of it as a subvectorspace of T_pM.)

The standard C^∞ chart for G_pM at P_p, using the pair $\bar{T}_p$, $\bar{T}_p^\perp$, is given by

$$\begin{aligned} gr_p\colon L(\bar{T}_p,\bar{T}_p^\perp) &\longrightarrow G_pM \\ h &\longmapsto \mathrm{graph}(h) \quad . \end{aligned}$$

The product chart $\exp_p \times gr_p$ gives us a bundlechart of GM over a neighborhood of p in M.

Let Π, $\Pi^\perp$ be planes in this chart which are

$$\Pi = \bar{T}_p \times 0 \times P_p \qquad \Pi^\perp = 0 \times T_p^\perp \times P_p \ .$$

Now $G\beta$, as a submanifold of GM which passes through $(0,0,P_p)$ in the chart, is the graph of a map

$$b\colon \Pi \longrightarrow \Pi^\perp \times \text{neighborhood of } 0 \text{ in } L(\bar{T}_p,\bar{T}_p^\perp) \ .$$

See the figure below.

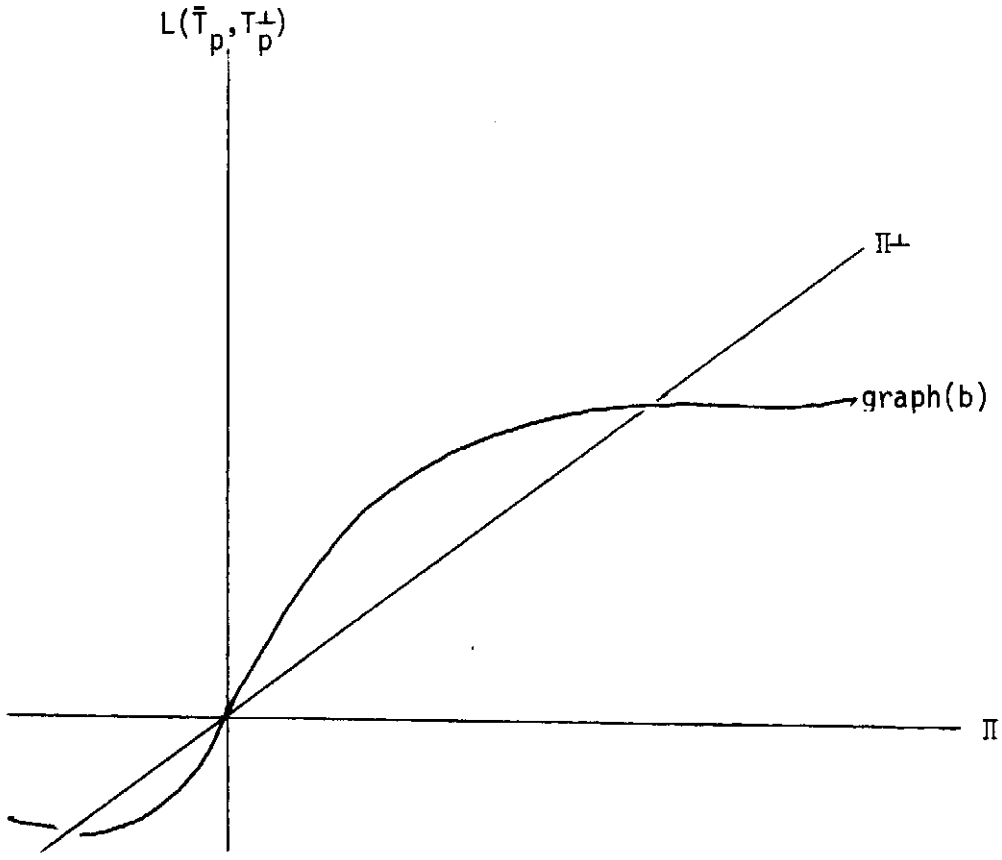

Similarly $G\beta'$ is the graph of b'. For $v \in \Pi \leftrightarrow \bar{T}_p$

$$b(v) = \{g(v), \text{ the tangent plane to } \beta \text{ at } (v,gv) \text{ expressed in the } gr_p\text{-chart}\} .$$

But this is just $(Dg)_v$. Since $\bar{\tau}^{r-1}$ is tangent to both $G\beta$ and $G\beta'$ at P_p, $|b(v)-b'(v)|/|v|^{r-1} \to 0$ as $v \to 0$. Hence

$$\frac{\|(Dg)_v-(Dg')_v\|}{|v|^{r-1}} \to 0 \quad \text{as} \quad v \to 0$$

which implies $(D^k g)_0 = (D^k g')_0$, $0 \leq k \leq r$. Hence $\bar{T}^r$ is well defined. Q.E.D.

(6.4) *PROPOSITION. If* $i: V \to M$ *is a* C^r *leaf immersion perhaps with boundary at which* f *is* r*-normally hyperbolic,* $r \geq 2$, *then* Gi *is a* C^{r-1} *leaf immersion at which* Gf *is* $(r-1)$*-normally hyperbolic.*

Remark. Note the abuse of notation in that $Gi: V \to GM$ is the map $x \mapsto \bar{T}_x = Ti(T_x V)$ while $Gf: GM \to GM$ is the Tf-induced map on GM.

Proof. Clearly Gi is a C^{r-1} immersion, Gi is uniformly $(r-1)$-self tangent, and V is complete respecting a Finsler on GM. To show that Gf is $(r-1)$-normally hyperbolic at Gi we must produce the appropriate $T(Gf)$-invariant splitting of $T_{\overline{Gi(V)}}(GM)$.

For each $p \in \Lambda$, G_pM contains two smooth manifolds, G_p^u, G_p^s, consisting of all v-planes lying in $N^u \oplus \bar{T}_p$, $\bar{T}_p \oplus N_p^s$. They meet transversally at the point $P_p = \bar{T}_p \in G_pM$ and they are Gf-invariant. (Note that $\dim G_p^u + \dim G_p^s = vu + vs = v(u+s+v-v) = \dim(\text{Grassmannian of } v\text{-planes in } \mathbb{R}^m)$.) Again we use P_p to emphasize when we think of $\bar{T}_p$ as a point in GM.

Since GM is a fiber bundle over M, its tangent bundle contains a canonical subbundle of "vertical" vectors tangent to the GM-fibers. There is a natural $T(Gf)$-invariant splitting

$$\mathrm{Vert}_{\bar{T}} = \mathrm{Vert}^u \oplus \mathrm{Vert}^s$$

where $\mathrm{Vert}_p^u = Tp_pG_p^u$ and $\mathrm{Vert}_p^s = Tp_pG_p^s$. We shall extend this splitting "into the horizontal direction", but first we give Vert^u, Vert^s Finslers. At P_p there is the standard smooth chart for G_p^u

$$gr_p\colon L(\bar{T}_p, N_p^u) \longrightarrow G_p^u \qquad gr_p(0) = \bar{T}_p\ .$$
$$g \longmapsto \mathrm{graph}(g)$$

and on $L(\bar{T}_p, N_p^u)$ there is the norm coming from the adapted Finsler on TM. Put the norm on $\mathrm{Vert}_{p_p}^u$ which makes

$$T_0(gr_p)\colon L(\bar{T}_p, N_p^u) \longrightarrow T_{p_p}(G_p^u)$$

an isometry. In the chart gr_p, Gf acts as

$$g \longmapsto N_p^u f \circ g \circ (\bar{T}_p f)^{-1}$$

and consequently

$$\begin{aligned} m(T(Gf)|\mathrm{Vert}_p^u) &\geq m(N_p^u f)\ m((\bar{T}_p f)^{-1}) \\ &= m(N_p^u f)\|\bar{T}_p f\|^{-1}\ . \end{aligned}$$

Similarly we give Vert^s a Finsler such that

$$\|T(Gf)|\mathrm{Vert}_p^s\| \leq \|N_p^s f\| m(\bar{T}_p f)^{-1}$$

Now for the horizontal direction. Choose any subbundles H^u, H^s of $T_{\bar{T}}(GM)$ projecting isomorphically onto N^u, N^s by $T\pi$

$$\begin{array}{cccc} GM & T(GM) & H^u & H^s \\ \downarrow \pi & \downarrow T\pi & \downarrow T\pi & \downarrow T\pi \\ M & TM & N^u & N^s \end{array}$$

Via $T\pi$, pull the Finslers of N^u, N^s up to H^u, H^s. On $H^u \oplus H^s \oplus \mathrm{Vert}$ put the sum Finsler. Since Gf is a fiber map, the bundle $H^u \oplus \mathrm{Vert}$ is $T(Gf)$-invariant. Thus we have the diagram

$$\begin{array}{ccccccccc} 0 & \longrightarrow & \mathrm{Vert}^s & \longrightarrow & H^u \oplus \mathrm{Vert} & \longrightarrow & H^u \oplus \mathrm{Vert}/\mathrm{Vert}^s & \longrightarrow & 0 \\ & & \downarrow \mathrm{Vert}^s(s) & & \downarrow T(Gf) & & \downarrow F^u(f) & & \\ 0 & \longrightarrow & \mathrm{Vert}^s & \longrightarrow & H^u \oplus \mathrm{Vert} & \longrightarrow & H^u \oplus \mathrm{Vert}/\mathrm{Vert}^s & \longrightarrow & 0 \end{array}$$

where $\mathrm{Vert}^s(f)$ and $F^u(f)$ are $T(Gf)$-induced.

The factor bundle $H^u \oplus \mathrm{Vert}/\mathrm{Vert}^s$ is naturally isomorphic to $H^u \oplus \mathrm{Vert}^u$ and the factor map $F^u(f)$ takes the form

$$\begin{bmatrix} N_p^u f & 0 \\ C & \mathrm{Vert}_p^u f \end{bmatrix}$$

C being the shear term. We are free to choose a convenient Finsler $|\ |_*$ on $H^u \oplus \mathrm{Vert}^u$. Put

$$|h+v|_* = |h| + \varepsilon|v|$$

where $\varepsilon > 0$ is small, $h \in H_p^u$, $v \in \mathrm{Vert}_p^u$, and the norms $|\ |$ are the ones already considered: $|h| = |T\pi(h)|$ in T_pM, $|v|$ = the gr_p-induced norm on Vert_p^u. In this Finsler $C\colon H^u \to \mathrm{Vert}^u$ appears to be very small since

$$|C(h)|_* = \varepsilon|Ch| \leq \varepsilon\|C\||h| = \varepsilon\|C\||h|_*$$

shows that $\|C\|_* \leq \varepsilon\|C\|$. Thus, we assure

$$\begin{aligned} m(F_p^u(f)) &\geq \min(m(N_p^u f), m(\mathrm{Vert}_p^u f)) \\ &\geq \min(m(N_p^u f), m(N_p^u f)\|\bar{T}_p f\|^{-1}) \\ &> 1 > \mathrm{Vert}_p^s f\ . \end{aligned}$$

Hence by (2.18) Vert^s has a unique $T(Gf)$-invariant complement in $H^u \oplus \mathrm{Vert}$. Call it E^u. Under $T(Gf)$, E^u is expanded and Vert^s is contracted. Invariance of E^u, Vert^s, and Vert^u implies $E^u \supset \mathrm{Vert}^u$. Similarly we find E^s.

Finally, since Gi is a C^{r-1} leaf immersion and $r-1 \geq 1$, Gi has an extended tangent bundle $\bar{\tau}$; $\bar{\tau}$ projects onto $\bar{T}$ under $T\pi$. On $\bar{\tau}$ put the pull back Finsler. Thus

$$T_{\overline{Gi(V)}}(GM) = E^u \oplus \bar{\tau} \oplus E'$$

is a $T(Gf)$-invariant splitting and

$$T(Gf)|E^u = \begin{bmatrix} N^u f & 0 \\ C & \mathrm{Vert}^u f \end{bmatrix}$$

respecting some choice of H^u, this time in E^u, projecting onto N^u. Again, we can rechoose the norm to make C small. Thus

$$m(T_{\bar{T}_p}(Gf)|E^u) \geq \min(m(N^u_p f), m(N^u_p f)\|\bar{T}_p f\|^{-1})$$

$$\|T_{\bar{T}_p}(Gf)|\bar{\tau}\| = \|\bar{T}_p f\|$$

$$m(N^u_p f) > \|\bar{T}_p f\|^k \qquad 0 \leq k \leq r-1 \qquad (\text{in fact} \leq r)$$

$$m(N^u_p f)\|\bar{T}_p f\|^{-1} > \|\bar{T}_p f\|^k \qquad 0 \leq k \leq r-1$$

This says $T(Gf)$ expands E^u $(r-1)$-more sharply than it does τ; similarly for E^s, and so Gf is $(r-1)$-normally hyperbolic at Gi. Q.E.D.

Now we turn to the question of generalizing the C^r Section Theorem, (3.5), to the noncompact case. We present two theorems in this direction, (6.5) and (6.7), but we were unable to prove a theorem uniting them (without using 6.1 itself) -- in particular we were unable to prove (6.5) directly for $r \geq 2$.

Definition of an r-*fiber contraction.* Let $\pi: E \to W$ be a C^r Banach bundle and let E, TW have Finslers. Let D be a disc subbundle of E of finite radius and let f be a C^r fiber map

$$\begin{tikzcd}
E \arrow[d] & D \arrow[l, hook'] \arrow[d, "\pi"] & D_0 \arrow[l, hook'] \arrow[r, "f"] \arrow[d, "\pi"] & D \arrow[d, "\pi"] \\
W \arrow[r, equal] & W & W_0 \arrow[l, hook'] \arrow[r, "h"] & W
\end{tikzcd}$$

where h overflows W_0; and E_0, D_0 are E, D restricted to W_0. Then f is an r-*fiber contraction* if and only if

$$\sup_{W_0} k(p) < 1 \qquad \text{and} \qquad \sup_{W_0} k(p)\alpha(p)^{-r} < 1$$

where $k(p) = \mathrm{Lip}(f|D_p)$, $\alpha(p) = m(T_p h)$.

(6.5) C^1 *SECTION THEOREM. Let* f *be a* C^1 *fiber map* $E \to E$ *where* E *is a* C^1 *Finslered vector bundle over* M. *Let* $w: W \to M$ *be a* C^1 *leaf immersion and assume* f *pulls back to a* 1-*fiber contraction of* w^*E.

$$\begin{tikzcd} w^*D_0 \arrow[r, "w^*f"] \arrow[d] & w^*D \arrow[d] \\ W_0 \arrow[r, "w^*h"] & W \end{tikzcd}$$

D = *a disc subbundle of* E .

Then there exists a unique f*-invariant section* $\sigma_f\colon \Lambda_0 \to E(\nu)$, $\Lambda_0 = \overline{w(W_0)}$, *and* σ_f *pulls back to the unique* w^*f*-invariant section* $\sigma_{w^*f}\colon W_0 \to w^*D_0$. *This* σ_{w^*f} *is* C^1 *and* $w_*\circ\sigma_{w^*f}$ *is a* C^1 *leaf immersion.*

$$\begin{tikzcd} & w^*D \arrow[r, "w_*"] \arrow[d] & D \arrow[d] & \\ W_0 \arrow[ur, "\sigma_{w^*f}"] \arrow[r, hook] \arrow[rrr, bend right, "w"'] & W \arrow[r, "w"] & M & \Lambda_0 \arrow[ul, "\sigma_f"'] \arrow[l, hook'] \end{tikzcd}$$

Remarks. The last sentence is the only surprising part of (6.5). We use the pull-back Finslers on w^*E and TW.

Proof of (6.5). f and w^*f are continuous, uniform fiber contractions of bounded Banach disc bundles which cover overflowing base homeomorphisms. By (3.1) they have unique invariant sections, $\sigma_f\colon \Lambda_0 \to D_0$, $\sigma_{w^*f}\colon W_0 \to w^*D_0$, where $D_0 = D|\Lambda_0$ and $\Lambda_0 = \overline{w(W_0)}$. The forward image of σ_{w^*f} gives a set-valued f-invariant section of D_0

$$p \mapsto \{w_*\sigma_{w^*f}(x)\colon w(x) = p\} \qquad p \in \Lambda_0 .$$

By invariance and fiber contractivity, the diameter of these sets is zero. By uniqueness,

$$w_*\circ\sigma_{w^*f} = \sigma_f\circ w \quad \text{on} \quad W_0 .$$

As in (3.5), we can assume E is trivial without loss of generality. Using the triviality, we can express

$$Tf = \begin{bmatrix} A & 0 \\ C & K \end{bmatrix} \qquad \text{respecting} \qquad TE = \mathrm{Hor} \oplus \mathrm{Vert}$$

where Hor_z is $T_{\pi z}M$. Since D_0 is compact, $\|C_z\|$ is uniformly bounded over $z \in D_0$. Also, triviality of E (and hence of w^*E) let us define the slope of a section at a point as in §3. The sections of w^*D having a slope $\leq \ell$ at each point form a closed subset $\Sigma(\ell)$ of the Banach space of all continuous sections of w^*E;

this is a pointwise property and can be verified in a chart at each point of W as in (3.5) -- we do not rely on plaques here. For large ℓ, we claim that $(w^*f)_\#$ carries $\Sigma_0(\ell)$ into itself. Again, the verification is pointwise as in (3.5), using the uniform boundedness of the shear $\|C_z\|$. Thus, the section $\sigma_{w^*f}: W_0 \to w^*D_0$ is uniformly Lipschitz. The proof that it is C^1 is identical to the Lipschitz-jet proof in (3.5).

The map $w_*\circ\sigma_{w^*f}: W_0 \to D \hookrightarrow E$ is now known to be C^1. W_0 is complete under the pull-back of the trivial Finsler on TE: distances are even greater than those in the w-pull-back Finsler. To find the extended tangent of $w_*\circ\sigma_{w^*f}$ we consider the continuous bundle L over Λ whose fiber at p is

$$L_p = L(\bar{T}_p, E_p) \qquad p \in \Lambda .$$

There is a natural Tf-induced map $L_p f: L_p \to L_{fp}$ such that

$$\text{graph } (L_p f(P)) = T_{\sigma_f p} f \text{ (graph } P)$$

where triviality of E has been used to identify T_pE and $T_{\sigma_f p}E$. In fact

$$L_p f(P) = (C_p + K_p P)\circ(A_p|\bar{T}_p)^{-1} .$$

By assumption, Lf is a 0-fiber contraction and by (3.1) there is a unique continuous Lf invariant section $\sigma_{Lf}: \Lambda_0 \to L$. The same construction applied to w^*f produces a continuous, bounded, $L(w^*f)$-invariant section of w^*L, say $\sigma_{L(w^*f)}$. As above, its forward image by w_* gives a set valued Lf-invariant section of L, and the diameters are forced to be zero. The unique $L(w^*f)$-invariant section of w^*L is $x \mapsto P_x$ where $\text{graph}(P_x) = T_z(\sigma_{w^*f}(W_0))$, $z = \sigma_{w^*f}(x)$. Thus, the extended tangent of $w_*\circ\sigma_{w^*f}$ is found as the graph of σ_{L_f}. This completes the proof of 6.5.

* * * * *

Definition. If $w: W \to M$ is an immersion and $f: M \to M$ then we say f *overflows* w if and only if f pulls back to a diffeomorphism $w^*f: W_0 \to W$ where $W_0 = w^{-1}(f(wW))$. This requires $w^*f(W_0) = W$.

Definition. Let f overflow w. Assume w is a C^1 leaf immersion with extended tangent $\bar{T} = \overline{Tw(TW)}$. Then f is *normally* r-*contractive* at w if and only if there is a splitting $\bar{T} \oplus N = T_\Lambda M$, $\Lambda = \overline{w(W)}$, overflowing invariant by Tf, such that

$$\sup_{\Lambda_0} \|N_x f\| m(\bar{T}_x f)^{-r} < 1 \qquad \Lambda_0 = \overline{w(W_0)} \ .$$

$$\sup_{\Lambda_0} \|N_x f\| < 1$$

(6.6) *COROLLARY. Let* $w\colon W \to M$ *be a* C^r *plaquated immersion with plaquation* P, $r \geq 1$, *and a* C^1 *leaf immersion at which the* C^r *map* $f\colon M \to M$ *is normally* r*-contractive. Suppose* $W_0 = w^* f^{-1} W$ *is contained in the set of points at which* P*-plaques are centered,* $\bigcup_P \rho(0)$. *Then* $w|W_0$ *is a* C^r *leaf immersion.*

Proof. When $r = 1$ this is trivial -- w is a C^1 leaf immersion by hypothesis. Let $r = 2$. By (6.3) it suffices to show that $Gw\colon W \to GM$ is a C^1 leaf immersion. Let $\tilde{T}$ and $\tilde{N}$ be smooth subbundles of TM such that $\tilde{T}$, $\tilde{N}$ are C^0 approximations to $\bar{T}$, N on $\Lambda = \overline{w(W)}$. Let $\tilde{L}$ be the smooth vector bundle over M whose fiber at z is

$$\tilde{L}_z = L(\tilde{T}_z, \tilde{N}_z) \ .$$

Let $\tilde{T}$, $\tilde{N}$ inherit Finslers from a fixed Finsler on TM. When $\tilde{T}$, $\tilde{N}$ are near $\bar{T}$, N, Tf acts naturally on $\tilde{L}(1) = \{P \in \tilde{L}\colon \|P\| \leq 1\}$ and

$$\begin{array}{ccc} \tilde{L}_{\Lambda_0}(1) & \xrightarrow{(Tf)_\#} & \tilde{L}_\Lambda(1) \\ \downarrow & & \downarrow \\ \Lambda_0 & \xrightarrow{f} & \Lambda \end{array} \qquad \Lambda = \overline{w(W)}$$

$$\Lambda_0 = \overline{w(W_0)}$$

$$\begin{array}{ccc} \tilde{L}(1) & \xrightarrow{(Tf)_\#} & \tilde{L} \\ \downarrow & & \downarrow \\ M & \xrightarrow{f} & M \end{array}$$

according to the graph transform: $(Tf)(\mathrm{graph}(P)) = \mathrm{graph}(Tf)_\# P$. Expressing Tf respecting $\tilde{T} \oplus \tilde{N}$ as

$$Tf = \begin{bmatrix} A & B \\ C & K \end{bmatrix}$$

we have $A \doteq Tf$, $B \doteq 0$, $C \doteq 0$, $K \doteq Nf$ over Λ_0. Thus $(Tf)_\# P = (C + KP) \circ (A + BP)^{-1}$ contracts the fiber over $x \in \Lambda_0$ by approximately the factor

$$\|K_x\|\|A_x^{-1}\| \doteq \|N_x f\| m(\bar{T}_x f)^{-1} < 1 .$$

We are going to apply the C^1 Section Theorem to $(Tf)_\#: \tilde{L}(1) \to \tilde{L}$ over w. The pull back of $\tilde{L}$ by w is a C^r bundle over W and

$$\begin{array}{ccc} w^*\tilde{L}(1) & \xrightarrow{w^*(Tf)_\#} & w^*\tilde{L}(1) \\ \downarrow & & \downarrow \\ W_0 & \xrightarrow{w^*f} & W \end{array}$$

has $w^*(Tf)_\# = (T(w^*f))_\#$. At $x \in \Lambda_0$, the fiber contraction of $(Tf)_\#$ is approximately $\|N_x f\| \cdot m(\bar{T}_x f)^{-1} = k_x$ and along $\bar{T}_x$ in the base the contraction is $m(\bar{T}_x f) = \alpha_x$. By assumption, f is normally 2-contractive at w; thus, $k_x \alpha_x < 1$ and the C^1 Section Theorem applies to $(Tf)_\#$ over w. We conclude: the unique $w^*(Tf)_\#$-invariant section $W_0 \to w^*\tilde{L}$ gives rise to a C^1 leaf immersion $W_0 \to \tilde{L}$.

$$\begin{array}{ccc} w^*\tilde{L} & \xrightarrow{w^*} & \tilde{L} \\ \uparrow & & \uparrow \\ W_0 & \longrightarrow & \Lambda_0 \end{array}$$

But of course this unique section is just $x \mapsto P_x$ where $P_x \in L(\tilde{T}_x, \tilde{N}_x)$ has graph $P_x = \bar{T}_x$. The bundle $\tilde{L}$ gives a smooth chart for GM around $\bar{T} \subset GM$. Thus we have shown that $Gw: W_0 \to GM$, $x \mapsto \bar{T}_{w(x)}$, is a C^1 leaf immersion. By (6.3), w is a C^2 leaf immersion.

Now suppose $r \geq 3$ and assume (6.6) proved for $r-1$. We show Gw is a C^{r-1} leaf immersion. We know it is a C^{r-1} plaquated immersion, its plaquation being $\{G\rho: \rho \in P\}$. By induction, w and Gw are C^{r-2} leaf immersions. By (6.4), which we can apply because $r-2 \geq 1$, Gf is normally $(r-1)$-contractive at Gw. By induction again, Gw is a C^{r-1} leaf immersion. By (6.3) w is a C^r leaf immersion of W_0. Q.E.D.

The second generalization of (3.5) seeks C^r invariant section of a bundle, but does not treat self intersections the section might have when immersed into M. The bundle is *not* assumed to be the pull-back of a smooth bundle over M, especially for induction reasons.

Definition. If manifolds M and N have preferred atlases A and B and if $f: M \to N$ then f is C^r-*uniform respecting* A, B if the maps $\psi^{-1}f\phi$ are uniformly C^r equicontinuous as ϕ, ψ vary over A, B.

Definition. Let $w: W \to M$ be an immersion with C^k plaquation $P = \{\rho\}$, $k \geq 1$, and let Y be a Banach space. A C^r *uniform* Y-*bundle over* (W,P) is a Banach bundle with fiber Y, $\pi: E \to W$, which has an atlas A of bundle charts over the $\rho \in P$

$$\begin{tikzcd} B^W \times Y \arrow[r, "\Phi"] \arrow[d] & E \arrow[d] \\ B^W \arrow[r, "\rho"] & W \end{tikzcd} \qquad \rho \in P$$

whose chart transfers, restricted to all sets of the form subset of $B^W \times Y(1)$, are uniformly C^r-equicontinuous. That is, given $\varepsilon > 0$ there must exist $\delta > 0$ such that

$$\|D^\ell(\Psi^{-1}\Phi)_{(x,y)} - D^\ell(\Psi^{-1}\Phi)_{(x',y')}\| < \varepsilon$$

whenever $\Phi, \Psi \in A$, domain $(\Psi^{-1}\Phi)$ contains (x,y) and (x',y'); $|y| \leq 1$; $|y'| \leq 1$; $0 \leq \ell \leq r$; and $|x-x'| < \delta$. Such an atlas A is called a C^r-*uniform atlas.*

Definition. A Finsler on E is A-*uniform* if $x \mapsto |\ |_x$ is C^0-uniform respecting A in the sense that the norms of Φ_x, Φ_x^{-1} are uniformly bounded where

$$\begin{tikzcd} & x \times Y \arrow[dr, "\Phi"] & \\ Y \arrow[ur] \arrow[rr, "\Phi_x"] & & E_{\rho_x} \end{tikzcd} \qquad \Phi \in A \qquad x \in B^W$$

and $\|\Phi_{x'} \circ \Phi_x^{-1}\| \rightrightarrows 1$ as $|x-x'| \to 0$. Similarly a Finsler on TW is said to be P-*uniform* if the norms of $T_x\rho$, $(T_x\rho)^{-1}$ are uniformly bounded and $\|T_{x'}\rho \circ (T_x\rho)^{-1}\| \rightrightarrows 1$ as $|x-x'| \to 0$. (We identified $T_x\mathbb{R}^W$ with $T_{x'}(\mathbb{R}^W)$ to form the composition.)

Definition. Let $\pi: E \to W$ be a C^r-uniform Banach bundle, $r \geq 0$, with C^r uniform atlas A, and suppose E, TW have uniform Finslers. A C^r-*uniform* r-*fiber contraction of* $E(\nu)$ is a C^r map

$$\begin{array}{ccc} E_0(\nu) & \xrightarrow{f} & E(\nu) \\ \downarrow & & \downarrow \\ W_0 & \xrightarrow{h} & W \end{array} \qquad \begin{array}{l} E(\nu) = \{v \in E\colon |v| \leq \nu\} \\ E_0(\nu) = E(\nu)|W_0 \end{array}$$

such that h is a C^r-diffeomorphism onto W, $\sup \operatorname{Lip}(f|E_x)m(T_x h)^{\ell} < 1$, $0 \leq \ell \leq r$, and f, h^{-1} are C^r-uniform maps respecting A, P.

(6.7) *THEOREM. Let* f *be a* C^r*-uniform* r*-fiber contraction of* $E(\nu)$, $r \geq 0$, *with* $W_0 \subset \bigcup_{\rho \in P} \rho(0)$. *Then* $E(\nu)$ *has a unique* f*-invariant section* σ_f. *This* σ_f *is* C^r*-uniform and depends continuously on perturbations of* f *in the natural sense. See below.*

Remark. For simplicity, even when $r = 0$, we assumed P is a C^1 plaquation of the C^1 manifold W. Although (6.7) remains true in the purely C^0 framework we need it only when the base space is C^1.

Proof. Let d_W be the metric on the connected components of W induced by the Finsler on TW

$$d_W(p,q) = \inf\{\int_0^1 |\dot\gamma(t)|dt\colon \gamma \text{ is a } C^1 \text{ curve from } p \text{ to } q \text{ in } W\} .$$

(Note that γ may pass through many plaques on its way from p to q even when $d_W(p,q)$ is small.) There exist constants ω, Ω depending only on P such that

(1) if $p \in W_0$ and $d(p,q) < \omega$ then q lies in a plaque $\rho \in P$ centered at p;

(2) if $p, q \in \rho$ and $P \in W_0$ then $\Omega^{-1} \leq d_W(p,q)/|\rho^{-1}p - \rho^{-1}q| \leq \Omega$.

Since the Finsler on TW is uniform respecting P, the length of any curve γ lying in a single plaque ρ is uniformly comparable to the length of $\rho^{-1}\circ\gamma$ in B^W. From this, (1) and the second inequality of (2) are clear. Suppose $p, q \in \rho$ and $p \in W_0$. Choose a plaque $\rho' \in P$ centered at p. If $d_W(p,q) \geq \omega$ there is nothing to prove, for $|\rho^{-1}p - \rho^{-1}q| \leq 2 =$ diameter B^W. If $d_W(p,q) < \omega$ then (1) says $q \in \rho'$ and so any curve γ from p to q is either uniformly comparable in length to $|\rho'^{-1}p - \rho'^{-1}q|$ or else γ exits ρ' between p and q. However, the subcurve of γ from p to its first point of $\partial\rho'$ has length uniformly comparable to 1, the radius of B^W. This completes the proof of (2).

Now let $r = 0$. Call Σ^c the set of all A-uniformly continuous sections of $E(\nu)$. Observe that Σ^c is complete respecting the sup norm $|\ |_0$. For if $|\sigma_n - \sigma|_0 \to 0$ then in each A-chart

$$\begin{aligned} |sx_1 - sx_2| &\le |sx_1 - s_n x_1| + |s_n x_1 - s_n x_2| + |s_n x_2 - sx_2| \\ &\le 2K|\sigma_n - \sigma|_0 + |s_n x_1 - s_n x_2| \end{aligned}$$

where $K > 0$ is constant depending on A only. Let $\varepsilon > 0$ be given. Fix n so large that $|\sigma_n - \sigma|_0 < \varepsilon/3K$. Then $|x_1 - x_2| < \delta = \delta_n$ implies $|s_n x_1 - s_n x_2| < \varepsilon/3$; thus $|sx_1 - sx_2| < \varepsilon$ whenever $|x_1 - x_2| < \delta$.

On Σ^c define the natural f-induced map

$$f_\#(\sigma)(x) = f \circ \sigma \circ h^{-1}(x) \qquad x \in W .$$

Observe that $f_\#$ contracts Σ^c into itself. (Certainly $f_\#$ contracts distance but it is not apparent in general that the composition of C^0-uniform maps is C^0-uniform.) Let $\sigma \in \Sigma^c$ and $\varepsilon > 0$ be given. There exists $\delta_1 > 0$ such that

$$|f_{\Phi\Phi'}(z_1) - f_{\Phi\Phi'}(z_2)| < \varepsilon$$

whenever $\Phi, \Phi' \in A$, $|z_1 - z_2| < \varepsilon$, $z_i = (x_i, y_i)$, $|y_i| \le 1$, $i = 1, 2$. (By $f_{\Phi\Phi'}$ we denote the (Φ,Φ')-representation of f, $\Phi'^{-1} \circ f \circ \Phi$.) Since σ is C^0-uniform, there exists $\delta_2 > 0$ such that

$$|\sigma_{\rho\Phi}(x_1) - \sigma_{\rho\Phi}(x_2)| < \delta_1$$

whenever $|x_1 - x_2| < \delta_2$ and Φ is the A-chart over ρ. Since h^{-1} is C^0-uniform, there is a $\delta_3 > 0$ such that

$$|(h^{-1})_{\rho\rho'}(x_1') - (h^{-1})_{\rho\rho'}(x_2')| < \delta_2$$

whenever $\rho, \rho' \in P$ and $|x_1' - x_2'| < \delta_3$. Now, given $\rho' \in P$ and $x_1' \in B^W$ choose $\rho \in P$ centered at $p_1 = h^{-1}(\rho' x_1') \in W_0$. Suppose $|x_2' - x_1'| < \delta = \min(\omega, \delta_3)$. By (1), $p_2 = h^{-1}(\rho' x_2')$ also lies in ρ. Hence

$$\begin{aligned} &|(f_\#\sigma)_{\rho'\Phi'}(x_1') - (f_\#\sigma)_{\rho'\Phi'}(x_2')| \\ &= |f_{\Phi\Phi'} \circ \sigma_{\rho\Phi} \circ (h^{-1})_{\rho'\rho}(x_1') - f_{\Phi\Phi'} \circ \sigma_{\rho\Phi} \circ (h^{-1})_{\rho'\rho}(x_2')| < \varepsilon \end{aligned}$$

since $|(h^{-1})_{\rho'\rho}(x_1') - (h^{-1})_{\rho'\rho}(x_2')| < \delta_2 \Rightarrow |\sigma_{\rho\Phi}(x_1) - \sigma_{\rho\Phi}(x_2)| < \delta_1$ $\Rightarrow |f_{\Phi\Phi'}(z_1) - f_{\Phi\Phi'}(z_2)| < \varepsilon$ when $x_i = (h^{-1})_{\rho'\rho}(x_i')$, $z_i = \sigma_{\rho\Phi}(x_i)$, $i = 1, 2$. Thus, $f_{\#}\sigma$ is also C^0-uniform and so $f_{\#}$ contracts Σ^c into itself. By completeness of Σ^c, $\sigma_f \in \Sigma^c$.

Let us consider perturbations f' of f. We assume f' is also a C^0-uniform fiber contraction overflowing W_0, that the fiber contraction constant of f', $\sup_x \mathrm{Lip}\,(f'|E_x)$, is uniformly bounded away from 1, and that the A-representations of f' approximate those of f in the following sense.

$$h^{-1}h'(p) \in \rho \quad \text{for each plaque } \rho \in P \text{ centered at } p \in W_0$$

$$|f'_{\Phi'\Phi}(z) - f_{\Phi'\Phi}(z)| < \varepsilon \quad \text{wherever both are defined}$$

Such a definition assures that $(f',\sigma) \mapsto f'_{\#}\sigma$ is a continuous function of f' and σ. (Note that $f' \mapsto f'_{\#}$ is not continuous!) By (3.1), the unique invariant section $f' \mapsto \sigma_{f'}$ of

$$F \times \Sigma^c \to F \times \Sigma^c$$

$$(f',\sigma) \to (f', f'_{\#}\sigma)$$

is continuous. This completes the proof of (6.7: $r = 0$).

The proof that σ_f is Lipschitz (and C^r, $r \geq 1$) is a modification of the proof of (3.5). Since we have purposely not assumed E is trivial and since E may be a Banach bundle, we deal with a section's slope via a C^{r-1}-*uniform linear connection* on E, i.e. a choice of a C^{r-1}-*uniform horizontal subbundle*, $\mathrm{Hor} \subset TE$, such that $T\pi$ bijects Hor_z to $T_{\pi z}W$ and $z \mapsto \mathrm{Hor}_z$ is a linear function of $z \in E_x$. Since vectors in different fibers of TE can not in general be added, it is not immediate what $z \mapsto \mathrm{Hor}_z$ being linear means. If $u_1, u_2 \in TE$ have $T\pi(u_1) = T\pi(u_2)$ then u_1, u_2 are *addable*. For there exist curves γ_1, γ_2 in E such that $\gamma_1'(0) = u_1$, $\gamma_2'(0) = u_2$, $\pi\gamma_1(t) \equiv \pi\gamma_2(t)$. Since $\gamma_1(t), \gamma_2(t)$ belong to the same fiber of E, we can form linear combinations $\gamma(t) = a_1\gamma_1(t) + a_2\gamma_2(t)$ and make sense of $a_1u_1 + a_2u_2 \overset{\text{def.}}{=} \gamma'(0)$. This sum is independent of which such γ_1, γ_2 we chose. That the subspace Hor_z depends linearly on $z \in E_x$ means all linear combinations of horizontal vectors are horizontal.

Remark. The definition of connection just given differs from that in [34, p. 43] where it is also required that smooth arcs in the base be liftable to smooth horizontal arcs in the total space which fit together to define translation of one fiber to another. Under our definition, Nomizu's requirement is satisfied if $r \geq 2$.

For let α be a smooth arc in W joining the points p, p'. There is a smooth flow on W, say ϕ, of which α is part of one trajectory. Since each $\mathrm{Hor}_q(E)$ is carried isomorphically onto $T_{\pi q}W$ by $T\pi$, there is a unique lift of the tangent field $\dot{\phi}$ to a horizontal tangent field $\dot{\psi}$ on E. Since $r \geq 2$, $\dot{\psi}$ is C^1 and generates a local flow ψ. By uniqueness, ψ covers ϕ. Thus, the arc α lifts locally to horizontal arcs through all points of E_p. Gronwall's inequality and linearity of Hor imply that the ψ-trajectories through E_p reach $E_{p'}$ and we get a translation diffeomorphism $E_p \to E_{p'}$ which, in fact, is linear. If $r = 1$, then Hor does not seem to define fiber translations.

Existence of local linear connections is trivial: $\Phi \in A$ trivializes E over ρ so take

$$\mathrm{Hor}_z^{\rho} = T_z(\Phi(\mathbb{R}^W \times y)) \qquad z = \Phi(x,y) .$$

To globalize, take a finite C^∞ partition of unity on M, $1 = \sum_{j=1}^{J} \psi_j$, with $\max_j\{\mathrm{diam}(\mathrm{supp}\ \psi_j)\} < \delta$ so small that

(3) if $\rho \in P$ and $d_M(w\rho(0), \mathrm{supp}\ \psi_j) < \delta$ then $\rho^{-1}(\mathrm{supp}(\psi_j \circ w))$ is interior to B^W;

(4) if $\rho_1, \rho_2 \in P$ have $\rho_1 \cap \rho_2 \neq \emptyset$ and $\rho_1(0), \rho_2(0) \in W_0 \cap W_\delta(\mathrm{supp}(\psi_j \circ w))$ then $\rho_1 \cap \mathrm{supp}(\psi_j \circ w) = \rho_2 \cap \mathrm{supp}(\psi_j \circ w)$.

Precompactness of $w \circ \rho$ in Emb implies that sets of small diameter in M located near the center $w\rho(0)$ of a plaque $\rho \in P$ do not contain points near its boundary. This proves (3), see the figure.

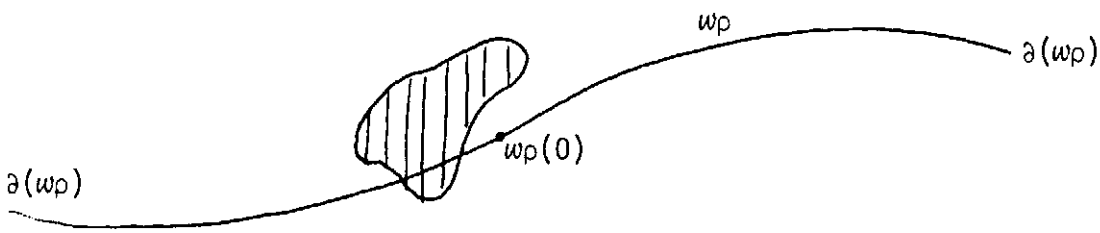

In (4), $W_\delta(\ )$ refers to the δ-neighborhood in W respecting d_W. When δ is small (1) implies $\rho_2(0) \in \rho_1$ and $\rho_1(0) \in \rho_2$. By (2), the set $\rho_1 \cap \mathrm{supp}(\psi_j w)$ which is very near $\rho_1(0)$ in ρ_1 must be very near $\rho_1(0)$ in ρ_2. This gives (4), see the figure.

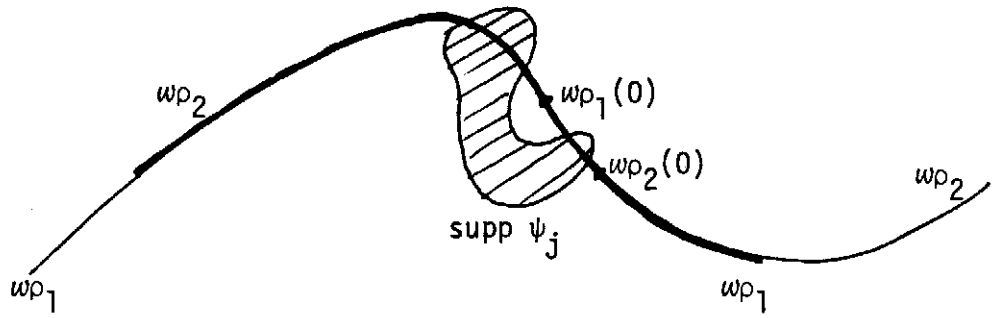

(4) implies that $\rho_1 \cap \rho_2 \neq \emptyset$ defines an equivalence relation on $\{\rho \in P\colon \rho(0) \in W_0 \cap W_\delta(\mathrm{supp}(\psi_j \circ w))\}$. Let $P_j \subset P$ be a family having just one ρ in each equivalence class. Then, $\bigcup_{P_j} \rho$ is a disjoint covering of $\mathrm{supp}(\psi_j \circ w)$ by plaques, and $\sum \psi_j \circ w = 1$ is subordinate to $\bigcup_j P_j$ on W_0. Put

$$\mathrm{Hor}_z = \sum_j \psi_j(w(\pi z)) \sum_{\rho \in P_j} \mathrm{Hor}_z^\rho$$

$$\overset{\mathrm{def}}{=} \{\sum \psi_j(w\pi z) u_j^\rho\colon u_1^\rho, \ldots, u_J^\rho \text{ are addable in } T_z E\}$$

Hor is a C^{r-1} uniform linear connection over W_0. For we constructed it from a C^{r-1}-uniform family of bundle charts (on TE) and a C^r-uniform partition of unity having at most J terms nonzero at any point.

In any chart $T\Phi$, $\Phi \in A$, Hor_z appears to be a nonvertical plane through z. That is, it appears to be the graph of a linear map $\mathbb{R}^W \to Y$ translated to z. The norm of this linear map is uniformly bounded since Hor is C^0-uniform.

It is no loss of generality to prove that $\sigma_f|W_0$ is C^r-uniform. For $\sigma_f = f \circ \sigma_f|W_0 \circ h^{-1}$. See the proof of (6.7: r = 0).

Relative to a linear connection we can define the slope of $\sigma\colon W_0 \to E_0$ at x as follows. Let $\theta\colon W \to E$ be a smooth section such that at x

$$(T_x\theta)(T_x W) = \mathrm{Hor}_{\sigma x}(E)$$

(θ depends on $\sigma(x)$). Then

$$\mathrm{slope}_x(\sigma) = \limsup_{x' \to x} \frac{|\sigma(x') - \theta(x')|_{x'}}{d_W(x', x)} .$$

This definition is independent of which θ we pick. Linearity of the connection implies slope_x defines a semi-norm on sections $W_0 \to E_0$ having a given value at x. Let

$$\Sigma(\ell) = \{\sigma \in \Sigma^c : \text{slope}_x(\sigma) \leq \ell \text{ for all } x \in W_0\} .$$

We claim that for ℓ large, $f_\#$ carries $\Sigma(\ell)$ into itself and $\Sigma(\ell)$ is closed in Σ^c. Write

$$Tf = \begin{bmatrix} A & 0 \\ C & K \end{bmatrix} \quad \text{resp.} \quad \text{Hor} \oplus \text{Vert} = TE_0$$

where Vert is the canonical subbundle of TE tangent to the fibers. Since f preserves fibers $B = 0$. Since f is C^r uniform and Hor is uniformly nonvertical,

$$\|C\| \text{ is uniformly bounded .}$$

As in §3, we calculate that

$$\text{slope}_{fx}(f_\#\sigma) \leq (\|C\| + \|K\|\ell)\|A^{-1}\| \leq \ell$$

by 1-contractiveness, provided $\ell >> \|C\|$. Hence $f_\#(\Sigma(\ell)) \subset \Sigma(\ell)$.

Verification of closedness of $\Sigma(\ell)$ in Σ^c is made easy by use of "flattening charts". For each $x_0 \in W_0$ there is a chart Ψ for E such that in $T\Psi$, Hor_z appears to be flat for all $z \in \pi^{-1}(x_0)$. (To get such a Ψ, take any $\Phi \in A$ at x_0. In $T\Phi$, Hor_z appears to be $z + \text{graph } P_z$ where $+$ means translation and $z \mapsto P_z \in L(\mathbb{R}^W, Y)$. Linearity of the connection means P_z depends linearly on y where $\Phi^{-1}(z) = (0,y) \in 0 \times Y$. The bundle chart $\Psi(x,y) = \Phi(x, y - P_{0,y}(x))$ flattens the connection at x_0.) Let $\sigma_1, \sigma_2, \ldots \in \Sigma(\ell)$ converge to σ in Σ^c. At each point $x_0 \in W_0$ choose a flattening E-bundle chart Ψ. If we compute all slopes with the flat connection from this chart, we will change nothing over x_0 and, since the connection and Finsler are continuous, will change things very little near x_0. Thus, given $\varepsilon > 0$ the sections $\sigma_1, \sigma_2, \ldots,$ restricted to a small neighborhood of x_0, will appear (in the chart) to have slope $\leq \ell + \varepsilon$. By the usual theorem [12], their limit σ will have slope, in the chart $\leq \ell + \varepsilon$. At x_0 the apparent slope and the true slope are equal. Hence $\text{slope}_{x_0}(\sigma) \leq \ell + \varepsilon$, and since ε was arbitrary, $\Sigma(\ell)$ is closed. Therefore σ_f is uniformly Lipschitz.

To see that σ_f is C^1 we use Lipschitz jets. Since E is not trivial, the proof of (3.5) needs slight modifications. Let

$$\mathcal{J}_x = \{J_x(\sigma)\colon \sigma\in\Sigma,\ \sigma(x)=\sigma_f(x) \text{ and } \mathrm{slope}_x(\sigma)<\infty\}\ .$$

Thus, $\mathcal{J}_x \subset J(W,x;E,\sigma_f(x))$. Using the connection on E we can define an origin for $\mathcal{J}_x$ as $J_x(\theta)$ where θ is a local section of E with $(T_x\theta)(T_xW) = \mathrm{Hor}_{\sigma_f x}$. Then $\mathcal{J}_x$ has a natural Banach space structure since the connection is linear. The "slope" gives it a Finsler: f naturally induces the diagram

$$\begin{tikzcd} \mathcal{J} \arrow[r, "\mathcal{J}f"] \arrow[d] & \mathcal{J} \arrow[d] \\ W_0^{\text{discrete}} \arrow[r, "h"] & W^{\text{discrete}} \end{tikzcd} \qquad \mathcal{J}f(J_x\sigma) = J_{hx}(f_\#\sigma) = J_{hx}(f\sigma h^{-1})\ .$$

$\mathcal{J}f$ contracts the fibers uniformly; this can be seen using bundle charts as above. Thus, as in (3.5), the unique invariant section is continuous and lies in $\mathcal{J}^d$ = jets of differentiable sections, so σ_f is C^1. (We give W the discrete topology in the diagram since otherwise $\mathcal{J}f$ may fail to be continuous.)

To prove σ_f is C^1-uniform, we "locate" $T(\sigma_f W_0)$ as in §3. This also lets us pass to the C^r case, $r \geq 2$. Let $\mathcal{L}$ be the bundle over W whose fiber at x is

$$\mathcal{L}_x = L(T_xW,E_x)\ .$$

Then $\mathcal{L}$ is a C^{r-1} Banach bundle over W and $\mathcal{L}$ has a natural Finsler. Moreover there are natural charts $\mathcal{L}\Phi\colon B^\omega \times L(R^\omega,Y) \to \mathcal{L}$ given by

$$\mathcal{L}\Phi(x,P) = \Phi\circ P\circ T_{\rho x}(\rho^{-1}) \in \mathcal{L}_x \qquad \phi\in A \text{ over } \rho\in\mathcal{P}\ .$$

These natural charts form a C^{r-1}-uniform atlas $\mathcal{L}A$ for $\mathcal{L}$ because they are basically just the tangent charts to the C^r-uniform atlas A. The Finsler on $\mathcal{L}$ is $\mathcal{L}A$-uniform.

Tf acts on $\mathcal{L}$ as follows. Using the connection, we can canonically identify $L(T_xW,E_x)$ and $L(\mathrm{Hor}_z(E),\mathrm{Vert}_zE)$, for $z = \sigma_f x$. Since Tf carries T_zE to $T_{fz}E$ we get an induced map $\mathcal{L}f\colon \mathcal{L}\to\mathcal{L}$ covering h. We want to prove that $\mathcal{L}f$ is an $(r-1)$-fiber contraction over h respecting the atlas $\mathcal{L}A$. For then, (6.7: r-1) applied to $\mathcal{L}f$ implies that σ_f is C^r-uniform since the unique invariant section of $\mathcal{L}f$ is $x \mapsto Q_x$, graph $(Q_x) = T_z(\sigma_f W)$, $z = \sigma_f x$.

Respecting Hor $\oplus$ Vert we write

$$Tf = \begin{bmatrix} A_z & 0 \\ C_z & K_z \end{bmatrix} \qquad z \in E_0(\nu) \quad .$$

We already observed that $\|C\|$ is uniformly bounded and we know that $\|K_z\| m(A_z)^{-k} < 1$, uniformly, $0 \leq k \leq r$. Also,

$$Lf(P) = (C_z + K_z P) \circ A_z^{-1}$$

where we have made the identication by the connection. Thus, it is immediate that Lf is an r-fiber contraction. It remains to verify that Lf is C^{r-1}-uniform respecting LA.

In two charts $L\Phi$, $L\Phi'$, the map Lf is represented as

$$x,P \xmapsto{Lf} \left(f_{\rho'\rho}(x),(C+KP)A^{-1}\right)$$

since

$$T_z f_{\rho'\rho} = \begin{bmatrix} A_z & 0 \\ C_z & K_z \end{bmatrix}$$

respecting $T\Phi^{-1}(\text{Hor}\oplus\text{Vert})$ and $T\Phi'^{-1}(\text{Hor}\oplus\text{Vert})$. To see that these functions are indeed uniformly C^{r-1}-equicontinuous is an application of the Chain Rule. $f_{\rho'\rho}$ is known already to be uniformly C^r equicontinuous. As functions of $z \in E_0(\nu)$, A_z, C_z, K_z are uniformly C^{r-1} equicontinuous since f is C^r-uniform; $z = \sigma_f x$ is C^{r-1}-uniform by induction. It follows as in the proof of (6.7: r=0) that A_z, C_z, K_z are uniformly C^{r-1}-equicontinuous functions of x. Operator inversion is a C^∞ operation whose derivatives involve universal constants and the norm of the isomorphism being inverted. Hence Lf is C^{r-1}-equicontinuous when represented in these charts, i.e. Lf is C^{r-1}-uniform respecting LA.

This completes the proof of (6.7: $r \geq 1$) except for perturbations, which we now consider. If f' C^r-uniformly approximates f then, from the way $T(\sigma_{f'}, W_0)$ is located in L and by induction, the proof of (6.7: r=0) carries over to show $\sigma_{f'}$ C^r-uniformly approximates σ_f. Q.E.D.

Proof of (6.1). Let i, V, M, Λ, f, $\bar{T}$, N^u, N^s be as in the hypothesis of (6.1):

$$\begin{tikzcd} V \arrow[r, "i"] \arrow[d, "i^*f"'] & M \arrow[d, "f"] \\ V \arrow[r, "i"] & M \end{tikzcd} \qquad \begin{aligned} &\overline{i(V)} = \Lambda \\ &\bar{T} = \overline{Ti(TV)} \subset T_\Lambda M \end{aligned}$$

$$\begin{tikzcd} T_\Lambda M = N^u \oplus \bar{T} \oplus N^s \arrow[r, "Tf"] \arrow[d] & N^u \oplus \bar{T} \oplus N^s \arrow[d] \\ \Lambda \arrow[r, "f"] & \Lambda \end{tikzcd}$$

$$T_\Lambda f = N^u f \oplus \bar{T} f \oplus N^s f$$

By hypothesis there is a Finsler on TM, adapted to f at i, and we may assume $|x+v+y| = \max(|x|,|v|,|y|)$ for $x \in N^u$, $v \in \bar{T}$, $y \in N^s$. Also M has a smooth exponential, exp, arising from its fixed, smooth Riemann structure. We use this exp extensively but *all norms below refer to the Finsler structure.*

Let η be a C^∞ subbundle of $T_\Lambda M$ such that $T_\Lambda M = \eta \oplus \bar{T}$. The pull back $i^*\eta$ is a C^r bundle over V. We must first prove that for small $\varepsilon > 0$, there is a unique continuous extension of i^*f from V to $i^*\eta(\varepsilon)$ such that

$$\begin{tikzcd} i^*\eta(\varepsilon) \arrow[r, dashed, "i^*f"] \arrow[d, "\exp\circ i_*"] & i^*\eta \arrow[d, "\exp\circ i_*"] \\ M \arrow[r, "f"] & M \end{tikzcd}$$

commutes. That is, we must show i has an η-tubular neighborhood in which f can be uniquely represented. Note that i^*f is not likely to preserve $i^*\eta$-fibers.

By (6.2), i has a C^r plaquation $P = \{\rho\}$. Each plaque ρ gives a C^r-embedded disc $i\rho$ in M and since $\eta|i\rho = \eta_{i\rho}$ is a smooth complement to $T(i\rho)$ in TM, there is, for each ρ, some $\varepsilon = \varepsilon(\rho) > 0$ such that

$$\exp|\eta_{i\rho}(\varepsilon) \quad \text{is an embedding .}$$

Since $i\circ P$ is precompact in Emb^r, a single ε_0 can be chosen which works for all $\rho \in P$. Given $v \in V$, we consider the small s-disc in M through $p = iv$

$$\exp_p(\eta_{iv}(\varepsilon)) \qquad \varepsilon \ll \varepsilon_0 .$$

Its f image is a small s-disc through fp. Choose a plaque $\rho' \in \mathcal{P}$ centered at $v' = i^*f(v)$. (By (6.2), ρ' exists.) Since $i \circ \mathcal{P}$ is precompact in Emb^r,

$$f(\exp_p(\eta_{iv}(\varepsilon))) \subset \exp(\eta_{i\rho'}(\varepsilon_0))$$

provided $\varepsilon \ll \varepsilon_0$. In this way we can uniquely extend i^*f locally from V to $i^*\eta(\varepsilon)$ by demanding

$$\begin{array}{ccc} (i^*\eta)_v(\varepsilon) & \xrightarrow{\ i^*f\ } & (i^*\eta)_{\rho'}(\varepsilon_0) \\ \Big\downarrow{\scriptstyle \exp\circ i_*} & & \Big\downarrow{\scriptstyle \exp\circ i_*} \\ M & \xrightarrow{\ f\ } & M \end{array}$$

commutes. Local uniqueness implies global existence and uniqueness.

If we begin with a different smooth bundle η complementary to $\tilde{T}$, then the two different tubular neighborhoods are canonically C^r diffeomorphic near V and the two representations of f are canonically C^r conjugate. Thus, it is no loss of generality to make a convenient choice of η: let $\tilde{N}^u$, $\tilde{N}^s$ be C^∞ subbundles of $T_\Lambda M$ which approximate N^u, N^s and choose $\eta = \tilde{N} = \tilde{N}^u \oplus \tilde{N}^s$.

It is useful to view the tubular neighborhood of V, $i^*\tilde{N}$, as a bundle E, not over V, but over some higher dimensional manifold, namely $X = i^*\tilde{N}^u$. This is easy to do, for the fiber of $i^*\tilde{N}$ at $v \in V$ is just $\tilde{N}_p$ (pulled back from $p = iv$ to v) and in it we affinely translate $\tilde{N}^s_p$ from the origin to all points $x \in N^u_p$. See the figure.

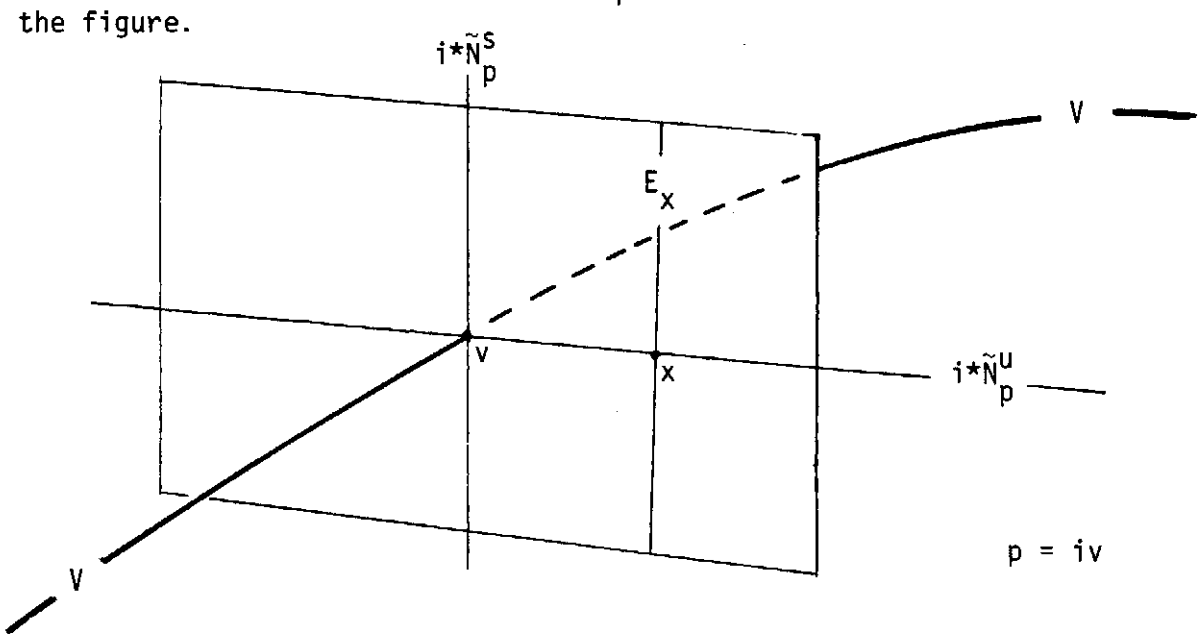

We are going to work with this E in the same way we worked with the E in §4. The unstable manifold for i^*f, W^u, turns out to be an invariant section of E. When constructing W^u it is no loss of generality to assume N^s is trivial. If N^s is not already trivial, we can find a C^∞ bundle ζ over M whose sum with N^s over Λ is trivial, extend f to ζ by letting it kill the ζ fibers and be the old f on the base = M. The extended f will be normally hyperbolic at $i: V \to M \hookrightarrow \zeta$ and its unstable manifold will lie in M by invariance. Of course we can no longer use invertibility of f in the construction of W^u.

Triviality of N^s as a C^0 bundle implies that $\tilde{N}^s$ is C^∞ trivial for each smooth $\tilde{N}^s$ near N^s. For we can project the trivializing sections of N^s into $\tilde{N}^s$ along $N^u \oplus \bar{T}$ and then approximate them in $\tilde{N}^s$ by C^∞ sections. C^0 triviality of N^s implies C^r-uniform triviality of E: let $\tilde{\zeta}_1,\ldots,\tilde{\zeta}_s$ be C^∞ sections trivializing $\tilde{N}^s$, let $i^*\tilde{\zeta}_1,\ldots,i^*\tilde{\zeta}_s$ be their pull backs to $i^*\tilde{N}^s$, and extend them from V to X using the canonical isomorphisms $E_x \leftrightarrow (i^*\tilde{N}^s)_q$ for $x \in i^*(\tilde{N}^u_q)$. Thus,

$$i^*\tilde{N} = E = X \times \mathbb{R}^s \qquad X = i^*\tilde{N}^u .$$

Although E is trivial as a vectorbundle, its natural Finsler is not constant. For we demand $|y|_x$ be defined to make the canonical isomorphisms

$$E_x \longleftrightarrow E_v \longleftrightarrow \tilde{N}^s_p \qquad p = iv$$

isometries, $y \in \mathbb{R}^s$.

To define the slope of a section of E (part of the construction of W^u) we need not only a Finsler on E but one on TX. Since we only care about W^u near V, we give a Finsler to $T(X(\varepsilon_0))$ where

$$X(\varepsilon_0) = i^*\tilde{N}^u(\varepsilon_0) .$$

As we saw above, the map χ defined by commutativity of

$$\begin{tikzcd} i^*\tilde{N} \arrow[r, "i_*"] & T_\Lambda M \arrow[d, "\exp"] \\ X(\varepsilon_0) \arrow[u, hook] \arrow[r, "\chi"] & M \end{tikzcd}$$

is an immersion. Pull the Finsler of TM back to one on $T(X(\varepsilon_0))$ by χ: $|w|_x = |T\chi(w)|_{\chi x}$.

We restrict E to $X(\varepsilon_0)$, still calling it E. If $\sigma: X(\varepsilon_0) \to E$ is a section then the *slope* of σ at x is

$$\limsup_{x' \to x} \frac{|sx'-sx|_x}{d_X(x',x)}$$

where $\sigma(x) = (x,sx)$ in $E = X(\varepsilon_0) \times Y$ and where d_X is Finsler-metric on $X(\varepsilon_0)$

$$d_X(x',x) = \inf\{\int_0^1 |\dot{\gamma}t|_{\gamma t} dt: \gamma \text{ is a } C^1 \text{ curve in } X(\varepsilon_0) \text{ from } x' \text{ to } x\} .$$

NOTE THE ABUSE OF NOTATION IN THAT WE OUGHT TO WRITE $d_{X(\varepsilon_0)}$. We shall see that i^*f naturally contracts the space $\Sigma(1,\varepsilon)$ of sections of $E|X(\varepsilon)$ having slope ≤ 1 everywhere, provided $\varepsilon << \varepsilon_0$. From this we get W^u, prove it is C^r via Lipschitz jets and (6.5,7), then show $\exp\circ i_*|W^u$ is a C^r leaf immersion via (6.6).

Everything hinges on a uniform local picture of i^*f in E, just as it did in the compact case. That is, we need a plaquation for χ. We have already the plaquation $P = \{\rho\}$ of V and we extend it into $X(\varepsilon_0)$ as follows. It is fair to assume $\exp|\eta_{\bar{\rho}}(\varepsilon_0)$ an embedding for all "limit plaques" $\bar{\rho} \in \overline{i\circ P}$, since $\overline{i\circ P}$ is compact and $\exp|\eta_{i\rho}(\varepsilon_0)$ is an embedding for all $\rho \in P$. Cover Λ by open sets $U_1,\ldots,U_\ell$ over which N^u is trivial. By uniformly reducing scale, it is fair to assume each $\bar{\rho}$ lies in a single U_j, $\bar{\rho} \in \overline{i\circ P}$. Also we can assume N^u is trivial over $\bar{U}_j$ and $\bar{U}_j$ is compact. As above C^0-triviality of N^u over $\bar{U}_j$ implies C^∞ triviality of $\tilde{N}^u|\bar{U}_j$. Let $\eta_{1j},\ldots,\eta_{uj}$ be smooth trivializing sections over $\bar{U}_j$ with $|\eta_{kj}| \leq \varepsilon_0/2u$. Define

$$\bar{\beta}(x,v;\bar{x}) = \exp\Big(\sum_{k=1}^{u} (x_k+\bar{x}_k)\eta_{kj}(i\rho(v))\Big)$$

when $(x,v) \in B^{u+v}$, $\bar{x} \in B^u$, and $x = (x_1,\ldots,x_u)$, $\bar{x} = (\bar{x}_1,\ldots,\bar{x}_u)$. We think of $\bar{x}$ as a parameter describing where $\bar{\beta}$ is centered. When $\bar{x} = 0$, $\bar{\beta}$ gives the tubular neighborhood of $i\rho$ in $\chi(X(\varepsilon_0))$. The set of such $\bar{\beta}(\ ;\bar{x})$ forms a precompact subset of $\mathrm{Emb}^r(B^{u+v},M)$ because $i\circ P$ is precompact, B^u is compact, there are just finitely many U_j's, $\tilde{N}^s$ is C^∞-trivial over each compact $\bar{U}_j$, and exp is C^∞. Call $X_\rho(\varepsilon_0) = i^*\tilde{N}^u(\varepsilon_0)|\rho$. As we saw before, χ embeds $X_\rho(\varepsilon_0)$ into M and $\bar{\beta} \subset \chi(X_\rho(\varepsilon_0))$ since $|\eta_{kj}| \leq \varepsilon_0/2u$ and $|\bar{x}| \leq 1$. Define β by commutativity of

$$\begin{tikzcd} B^{u+v} \arrow[r, "\beta"] \arrow[dr, "\bar\beta(\ ;\bar x)"'] & X(\varepsilon_0) \arrow[d, "\chi"] \\ & M \end{tikzcd}$$

By construction $\chi\circ\mathcal{B}$ is precompact in $\mathrm{Emb}^r(B^{u+v},M)$ where $\mathcal{B} = \{\beta\}$. The center of β is $\beta(0)$ and $\bar\beta(0,0;\bar x) = \chi(\beta(0)) = \exp\big(\sum_{k=1}^{u} \bar x_k \eta_{kj}(iv)\big)$ where $v = \rho(0)$. Thus for small ε, every point of $X(\varepsilon)$ is the center of some $\mathcal{B}$-plaque. Taking ε still smaller, the same is true of $(i^*f)(X(\varepsilon))$, i.e.

$$X(\varepsilon) \text{ and its } i^*f\text{-image lie in } \bigcup_{\mathcal{B}} \beta(0) .$$

Thus: $\mathcal{B}$ *plaquates* χ *and its plaque centers fill out a conveniently large neighborhood of* V.

It would be natural to define E-bundlecharts over the plaques β, as we did in §4, and prove uniformities like (i-iv). But since we had to work always with Finslers, not Riemann structures (due to induction requirements), this is not quite possible. Instead we define E-bundlecharts over "exponential plaques".

Let $\mathcal{B}_V$ denote the plaques centered at V. Each $\beta \in \mathcal{B}_V$ locally defines an exponential map $\check\beta$ as follows

$$\begin{tikzcd} T_vX \arrow[r, "T_v\beta^{-1}"] \arrow[d, dashed, "\check\beta"] & T_0(\mathbb{R}^{u+v}) \approx \mathbb{R}^{u+v} \\ X & B^{u+v} \arrow[l, "\beta"'] \arrow[u, hook] \end{tikzcd} \qquad v = \beta(0) \in V$$

Under the identification, $T_0(T_vX) \approx T_vX$, $T_0\check\beta$ is the identity -- as it ought to be for $\check\beta$ to be called an exponential map. The crucial difference between T_vX and $\mathbb{R}^{u+v}$ is that T_vX has a norm adapted to Tf. Uniformly rescaling all norms, it is fair to assume $\check\beta$ is defined on the unit disc bundle of T_vX respecting the TX-Finsler: $\mathrm{domain}(\check\beta) \supset T_vX(1)$ for all $\beta \in \mathcal{B}_V$, $v = \beta(0)$. Since E is globally trivial we get an E-bundlechart over part of β (namely over $\check\beta(T_vX(1)) \subset \beta$)

$$e_\beta\colon T_vX(1) \times \mathbb{R}^s \xrightarrow{\check\beta \times \mathrm{id}} E_\beta .$$

The e_β give a uniform atlas for E, and the Finsler of E is uniform respecting it.

In e_β we can measure distance according to the linear Finslers of T_vX and E_v at $v = \beta(0)$ or relative to the intrinsic distance d_X and $|\ |_x$. It is useful to know that infinitessimally these notions agree and that this is true uniformly over $\beta \in \mathcal{B}_V$. As $d_X(x,x') \to 0$ and $d_X(x,v) \to 0$ we claim

$$\text{(i)} \qquad \frac{|y|_x}{|y|_{x'}} \rightrightarrows 1 \qquad\qquad \frac{|\check{x}-\check{x}'|_v}{d_X(x,x')} \rightrightarrows 1$$

where $x, x' \in \beta$, $\beta \in \mathcal{B}_V$, $\beta(0) = v \in V$, $\check{\beta}\check{x} = x$, $\check{\beta}\check{x}' = x'$, $y \in E_x - 0$. Since $\chi \circ \mathcal{B}$ is precompact in $\mathrm{Emb}^1(B^{u+v},M)$ and $\check{\beta}$ is constructed canonically from β, it suffices to give a uniform proof of (i) for just one $\beta \in \mathcal{B}_V$. Since the Finsler on E is uniform, the first limit is clear. Similarly, since the Finsler on TX is uniform, $|\ |_x/|\ |_v \rightrightarrows 1$. The denominator $d_X(x,x')$ equals $\inf\{\int_0^1 |\dot{\gamma}(t)|_{\gamma t}dt$: γ is a C^1 curve in X from x to $x'\}$. As in (2) of (6.7) we get from $|\ |_x/|\ |_v \rightrightarrows 1$,

$$|\check{x}-\check{x}'|_v - o(1) \le d_X(x,x') \le |\check{x}-\check{x}'| + o(1)$$

which completes the proof of (i).

A global version of (i) compares the Finsler-metrics d_X, d_V when

$$d_V(v,v') = \inf\{\int_0^1 |\dot{\gamma}t|_{\gamma t}dt\text{: } \gamma \text{ is a } C^1 \text{ curve in } V \text{ from } v \text{ to } v'\}$$

$$d_X(v,v') = \inf\{\int_0^1 |\dot{\gamma}t|_{\gamma t}dt\text{: } \gamma \text{ is a } C^1 \text{ curve in } X(\varepsilon_0) \text{ from } v \text{ to } v'\}$$

v, v' being in V. Clearly $d_V \ge d_X$. Since $\tilde{N}^u$ is a smooth bundle there is a uniform C_0 such that

$$\|T_x\tilde{\pi}^u\| \le C_0 \qquad\qquad x \in \tilde{N}^u(1)$$

where $\tilde{\pi}^u\colon \tilde{N}^u \to M$ and $T\tilde{\pi}^u\colon T(\tilde{N}^u) \to TM$. Then, since exp is smooth and M is compact, the projection

$$\begin{array}{c} i^*\tilde{N}^u(\varepsilon_0) \\ \Big\downarrow{\scriptstyle i^*\tilde{\pi}^u} \\ V \end{array} \qquad \text{has} \qquad \|T_x(i^*\tilde{\pi}^u)\| \le C \qquad x \in i^*\tilde{N}^u(\varepsilon_0)$$

for some uniform C. (We use the TX-Finsler so C may need to be $> C_0$.) If γ is

any C^1 curve from v to v' in $X(\varepsilon_0)$ then $\alpha = (i^*\tilde{\pi}^u)\circ\gamma$ is a C^1 curve in V from v to v' and $|\dot{\alpha}t|_{\alpha t} \le C|\dot{\gamma}t|_{\gamma t}$. Hence

$$\text{(i')} \qquad \frac{d_V(v,v')}{d_X(v,v')} \quad \text{is uniformly bounded .}$$

Next express i^*f in charts e_β, $e_{\beta'}$ where $\beta'(0) = v' = i^*f(v)$, $v = \beta(0)$.

$$f_{\beta'\beta} = e_{\beta'}^{-1}\circ i^*f\circ e_\beta = T_0 f_{\beta'\beta} + r_{\beta'\beta} \quad .$$

Since $f_{\beta'\beta}$ is the pull back of a C^r map on a compact manifold, $\chi\circ\mathcal{B}$ is precompact, and E is uniformly trivial,

$$\text{(ii)} \qquad \|D(r_{\beta'\beta}|\check{\beta}(T_vX(\varepsilon)))\| \rightrightarrows 0$$

as $\varepsilon \to 0$.

The third and fourth uniformities concern how $X(\varepsilon)$ compares with certain "boxes" in the β's. If $\beta \in \mathcal{B}_V$, $\beta(0) = v \in V$, and $\nu, \mu > 0$ are small we set

$$\check{\beta}(\nu,\mu) = i^*\tilde{N}_p^u(\nu) \times T_vV(\mu)$$
$$\beta(\nu,\mu) = \check{\beta}(\check{\beta}(\nu,\mu))$$

where $p = iv$. (Since $v \in V$ and X is a bundle over V, the tangent space to X at v splits canonically according to fiber $\times$ base.) Note that we use the Tf-adapted Finsler, see the figure.

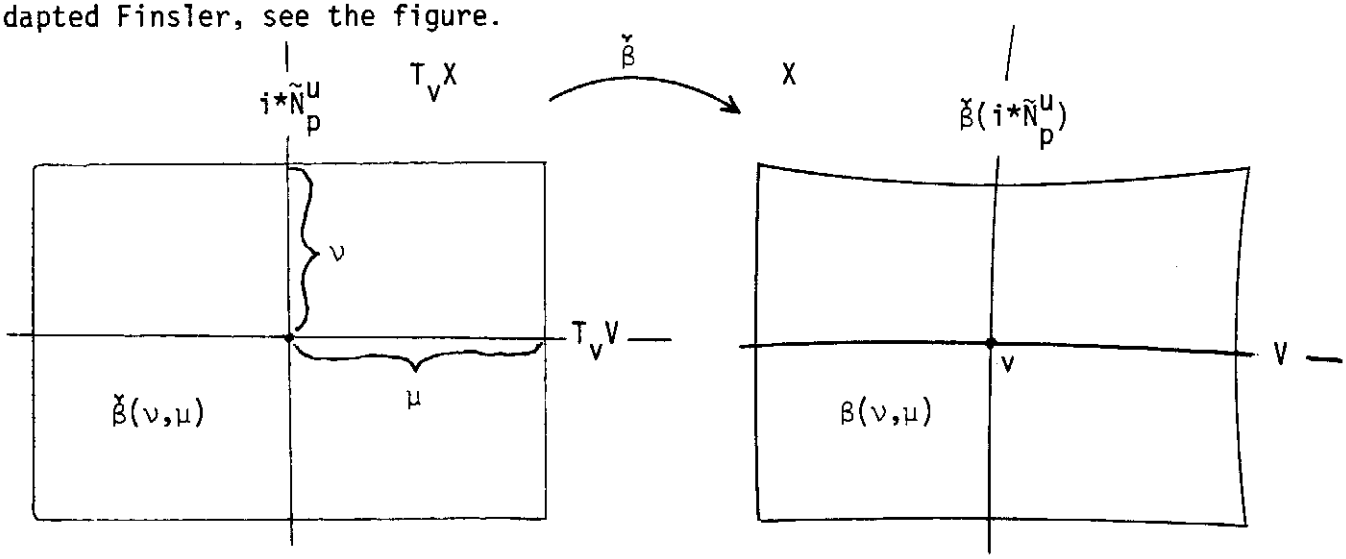

Given $0 < \omega < \omega' < 1$ we claim there exists a $\delta > 0$ such that

$$\text{(iii,iv)} \qquad X(\varepsilon) \supset \beta(\omega'\varepsilon,\delta) \supset \beta'(\omega\varepsilon,\omega\varepsilon)$$

whenever $\beta, \beta' \in B_V$, $|\check{\beta}^{-1}\check{\beta}'(0)| \leq \delta/2$, and ε is small. These inclusions follow from (i) as in the compact case. See the figure in §4. *From now on we assume* $\varepsilon \leq \delta$.

Let us return to the construction of W^u for i^*f. We call $\Sigma(1,\varepsilon)$ the set of all sections of $E(\varepsilon)$ over $X(\varepsilon)$ having slope ≤ 1 everywhere. Since E is trivial, this makes sense. We claim that i^*f induces a contraction of $\Sigma(1,\varepsilon)$

$$(i^*f)_{\#}\sigma = f\circ\sigma\circ h^{-1}|X(\varepsilon)$$

where

$$h = \pi\circ(i^*f)\circ\sigma \qquad \sigma \in \Sigma(1,\varepsilon) .$$

At least we claim this when $\tilde{N}^u$, $\tilde{N}^s$ are near N^u, N^s and ε is subordinately small. By "subordinately small" we mean that the smallness of ε can (and must) depend on how close $\tilde{N}^u$, $\tilde{N}^s$ are to N^u, N^s. We shall write $\tilde{N} \to N$ as shorthand for $\tilde{N}^u, \tilde{N}^s \to N^u, N^s$. The hard thing to prove is that $f_{\#}$ is well defined. For instance $\partial X(\varepsilon)$ is probably highly non-smooth.

First fix $0 < \omega < \omega' < \omega'' < 1$ so that

$$\inf_{p\in\Lambda} \omega m(N^u_p f) > 1 .$$

Since $N^u f$ expands and Λ is compact such an ω exists. Note that $\omega, \omega', \omega''$ are independent of $\tilde{N}^u$, $\tilde{N}^s$, ε.

It will be convenient to have a bundle map $F: T_\Lambda M \to T_\Lambda M$ preserving the splitting $\tilde{N}^u \oplus \bar{T} \oplus \tilde{N}^s$, even though $T_\Lambda f$ does not. Let

$$T_\Lambda f = \begin{bmatrix} \tilde{A}_{11} & \tilde{A}_{12} & \tilde{B}_1 \\ \tilde{A}_{21} & \tilde{A}_{22} & \tilde{B}_2 \\ \tilde{C}_1 & \tilde{C}_2 & \tilde{K} \end{bmatrix} \quad \text{respecting} \quad \tilde{N}^u \oplus \bar{T} \oplus \tilde{N}^s$$

and set

$$F = \begin{bmatrix} \tilde{A}_{11} & 0 & 0 \\ 0 & \tilde{A}_{22} & 0 \\ 0 & 0 & \tilde{K} \end{bmatrix} \qquad \begin{aligned} \tilde{A}_{11}&: \tilde{N}^u \to \tilde{N}^u \\ \tilde{A}_{22}&: \bar{T} \to \bar{T} \\ \tilde{K}&: \tilde{N}^s \to \tilde{N}^s . \end{aligned}$$

Then $F \to T_\Lambda f$ as $\tilde{N} \to N$. We can equally well consider F pulled back to V

$$\begin{array}{ccc} T_vE & \xrightarrow{F} & T_vE \\ \downarrow & & \downarrow \\ V & \xrightarrow{i^*f} & V \end{array}$$

where we split T_vE canonically as $i^*\tilde{N}_p^u \oplus T_vV \oplus i^*\tilde{N}_p^s$, for $p = iv$.

Let $\beta, \beta' \in \mathcal{B}_V$ be plaques with $\beta(0) = v$, $\beta'(0) = v'$, $i^*f(v) = v'$. Express i^*f in the e_β, $e_{\beta'}$ charts as

$$f_{\beta'\beta} = e_{\beta'}^{-1} \circ i^*f \circ e_\beta = F_{\beta'\beta} + R_{\beta'\beta}$$

where R is the remainder. As $\tilde{N} \to N$ and $\delta \to 0$ subordinately, we get from (ii)

$$\text{(ii')} \qquad \mathrm{Lip}(R_{\beta'\beta}|\check{\beta}(\delta,\delta)) \rightrightarrows 0 .$$

In e_β, $e_{\beta'}$ express h as

$$h_{\beta'\beta} = e_{\beta'}^{-1}(\pi f\sigma)e_\beta = F|T_vX + e_{\beta'}^{-1}(\pi R\sigma)e_\beta \quad .$$

By (iii), $\mathrm{domain}(h) = X(\varepsilon) \supset \beta(\omega''\varepsilon,\delta)$ when δ is small and $\varepsilon << \delta$. Measuring Lipschitz constants of maps in the exponential plaque and using (i) we get

$$\text{(v)} \qquad \mathrm{Lip}\left(e_{\beta'}^{-1}(\pi R\sigma)e_\beta|\check{\beta}(\omega''\varepsilon,\delta)\right) \rightrightarrows 0$$

as $\tilde{N} \to N$ and $\delta \to 0$ subordinately. For this Lipschitz constant is $\leq$

$$\mathrm{Lip}(e_{\beta'}^{-1}\pi e_{\beta'})\mathrm{Lip}\Big(\underbrace{e_{\beta'}^{-1}Re_\beta}_{=R_{\beta'\beta}}|\check{\beta}^{-1}(\sigma(\beta(\omega''\varepsilon,\delta)))\Big)\mathrm{Lip}(e_\beta^{-1}\sigma e_\beta|\check{\beta}(\omega''\varepsilon,\delta))$$

$e_{\beta'}\pi e_{\beta'}$ is just the projection $T_vX \times \mathbf{R}^s \to T_vX$ in the e_β-chart so the first factor is ≤ 1. Since σ takes values in $E(\varepsilon)$, (ii') implies the second factor tends uniformly to zero. By (i), the chart expression for σ, $e_\beta^{-1}\sigma e_\beta$, has at v almost the same slope as σ has intrinsically at v. Thus, the last factor is $\leq 1 + o(1)$ and (v) is proved.

By (3.7) we conclude from (v) that h is injective on $\beta(\omega''\varepsilon,\delta)$ for small δ, $\varepsilon << \delta$, and all $\beta \in \mathcal{B}_V$. We claim that

(vi) $\qquad h$ is globally injective on $X(\omega'\varepsilon)$

for each $h = \pi f\sigma$, $\sigma \in \Sigma(1,\varepsilon)$, provided ε is small. (Pathology of $\partial X(\varepsilon)$ conceivably makes (vi) false for $\omega'\varepsilon = \varepsilon$.) Suppose (vi) is false, i.e. $h(x_1) = h(x_2)$ for some $x_1 \in i^*\tilde{N}^u_{p_1}(\omega'\varepsilon)$, $x_2 \in i^*\tilde{N}^u_{p_2}(\omega'\varepsilon)$, $p_1 = iv_1$, $p_2 = iv_2$. Choose $\mathcal{B}_V$-plaques β_1, β_2 at v_1, v_2. How far apart can v_1 and v_2 be? Recall from (i') that d_V/d_X is uniformly bounded on V, say by the constant C. We get

$$0 = d_X(h(x_1),h(x_2)) \geq d_X(v_1,v_2) - d_X(v_1,x_1) - d_X(v_2,x_2) \geq \frac{1}{C}\, d_V(v_1,v_2) - 2\varepsilon \ .$$

Hence, $d_V(v_1,v_2) \leq 2\varepsilon C$. This is $< \delta/2$ for small ε. By (vi), $\beta_1(\omega''\varepsilon,\delta) \supset \beta_2(\omega'\varepsilon,0)$; i.e., x_1, x_2 both lie in $\beta_1(\omega''\varepsilon,\delta)$, contradicting injectivity of h on $\beta_1(\omega''\varepsilon,\delta)$. This proves (vi).

To complete the proof that $i^*f_\#\sigma$ is well defined, we show $h(X(\omega'\varepsilon)) \supset X(\varepsilon)$. By (iv) applied to $0 < \omega < \omega' < 1$, we know that

$$X(\omega'\varepsilon) \supset \beta(\omega\varepsilon,\omega\varepsilon) \qquad \beta \in \mathcal{B}_V \ .$$

(We now forget δ.) As above, let β, β' be plaques at v, $v' \in V$ where $i^*f(v) = v'$. By (3.7), the image of $\check{\beta}(\omega\varepsilon,\omega\varepsilon)$ under F or under $h_{\beta'\beta}$ is nearly the same:

$$h_{\beta'\beta}\big(\check{\beta}(\omega\varepsilon,\omega\varepsilon)\big) \supset \check{\beta}'\big(\omega\varepsilon(\lambda-2\ell),\omega\varepsilon(\mu-2\ell)\big)$$

where $\mu = \inf\{m(\bar{T}_p f)\colon p\in\Lambda\}$, λ was defined above as $\inf\{m(N^u_p f)\colon p\in\Lambda\}$, and

$$\ell = |h_{\beta'\beta}(0)| + \mathrm{Lip}\big(e_{\beta'}^{-1}(\pi R\sigma)e_\beta|\check{\beta}(\omega\varepsilon,\omega\varepsilon)\big) \ .$$

As $\tilde{N} \to N$ and $\varepsilon \to 0$ subordinately, $\ell \rightrightarrows 0$ by (v). Since $\omega\lambda > 1$ and $\mu > 0$, we can find small enough $\varepsilon > 0$ so that

$$h\big(\beta(\omega\varepsilon,\omega\varepsilon)\big) \supset \beta'(\varepsilon,0)$$

for all h. Since $\bigcup_{\mathcal{B}_V} \beta'(\varepsilon,0) = X(\varepsilon)$ this proves $hX(\omega'\varepsilon) \supset X(\varepsilon)$. Hence, $h^{-1}\colon X(\varepsilon) \to X(\varepsilon)$ is a well defined map and

$$i^*f_\#\sigma(x) = f\sigma h^{-1}(x) \qquad x \in X(\varepsilon)$$

makes sense.

Verification that $(i^*f)_\#$ contracts $\Sigma(1,\varepsilon)$ into itself is easy, using the e_β-representations of $(i^*f)_\#$ and (i). By (3.7), (v), and (i) the pointwise Lipschitz constant of h^{-1} is $\leq$

$$[m(N^u(f)\oplus\bar{T}f) - \ell - o(1)]^{-1}$$

where ℓ is as above, $\ell \rightrightarrows 0$. Since we put the sum Finsler on $T_\Lambda M = N^u \oplus \bar{T} \oplus N^s$, and $m(N^u f) > \|\bar{T}f\|$, $m(N^u(f)\oplus\bar{T}f) = m(\bar{T}f)$. Thus

$$\mathrm{Lip}(h^{-1}) \leq m(\bar{T}f)^{-1} + o(1)$$

as $\tilde{N} \to N$ and $\delta \to 0$ subordinately. By normal hyperbolicity, the slope of $i^*f\sigma h^{-1}$ represented in the e_β-charts is $\leq$

$$[\|N^s f\| + o(1)][1 + o(1)][m(\bar{T}f)^{-1} + o(1)] < 1$$

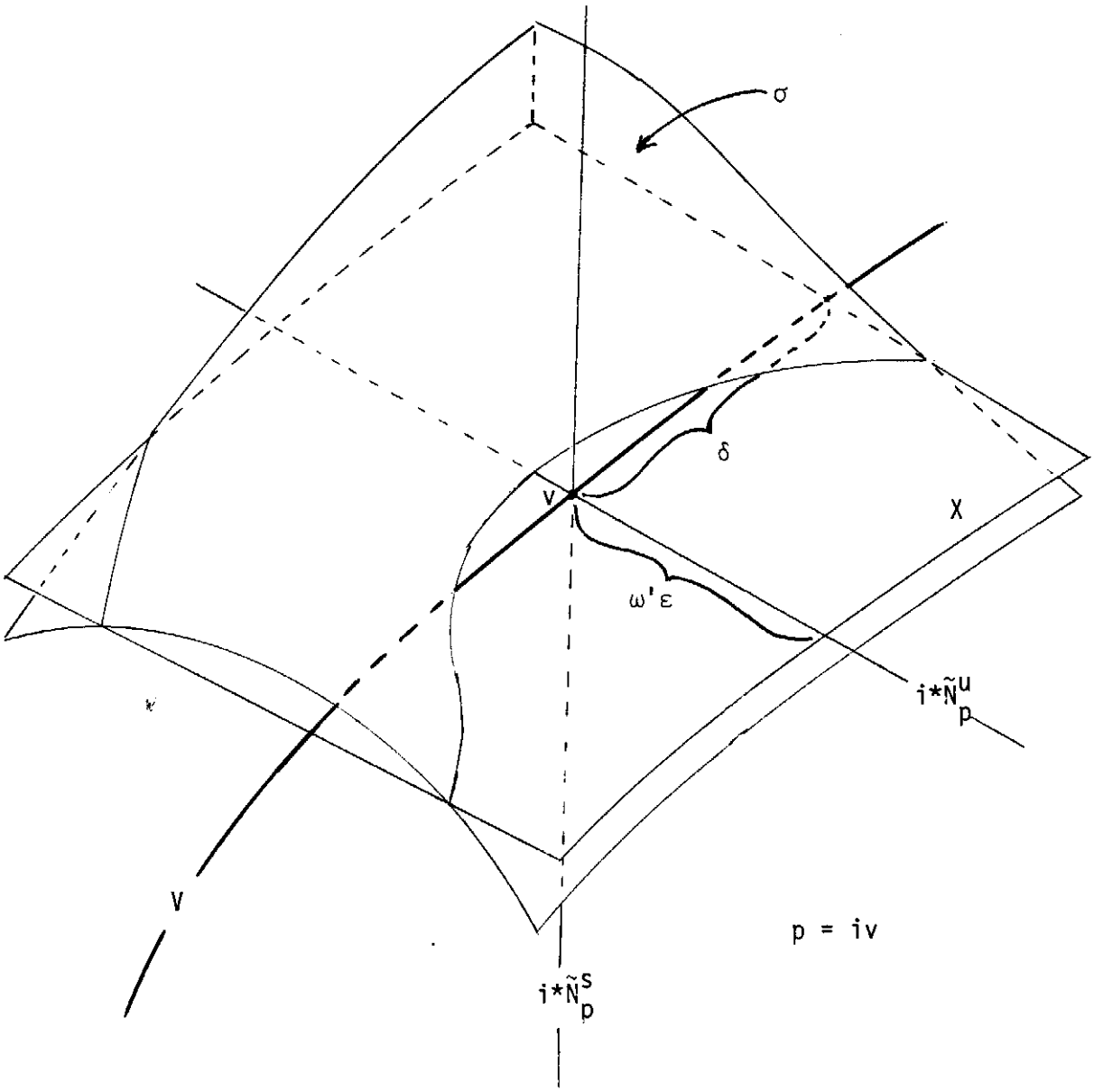

and so $(i^*f)_\#$ carries $\Sigma(1,\varepsilon)$ into itself. The proof that $(i^*f)_\#$ is a contraction is identical to that in §4. The fixed point of $(i^*f)_\#$ is called σ_{i^*f}. Then $W^u = \text{image}(\sigma_{i^*f})$.

Now that σ_{i^*f} is known to exist, we must prove that

$$\omega^u = \exp\circ i_*\circ\sigma_{i^*f}\colon X(\varepsilon) \to M$$

is a C^r leaf immersion. We are going to use (6.6), so we need to prove ω^u is a C^r plaquated immersion, a C^1 leaf immersion, and f is r-contractive at ω^u. By construction, σ_{i^*f} is uniformly Lipschitz. To show that $\sigma_{i^*f} \in C^1$ we use Lipschitz jets. As in (3.5), (6.7) let

$$\mathcal{J}_x = \{J_x\sigma\colon \sigma \in \Sigma(1,\varepsilon) \text{ and } \sigma(x) = \sigma_{i^*f}(x)\} .$$

Then f induces $\mathcal{J}f\colon \mathcal{J}_x \to \mathcal{J}_{hx}$, $h = \pi\circ f\circ\sigma_{i^*f}$, in the natural way: $\mathcal{J}f(J_x\sigma) = J_{hx}(f_\#\sigma)$. As in (4.1) we use the uniform charts to see that $\mathcal{J}f$ contracts fibers uniformly. This gives a unique bounded $\mathcal{J}f$-invariant section which takes values in $\mathcal{J}^d$ = jets of differentiable sections. Since $x \mapsto J_x\sigma_{i^*f}$ is also $\mathcal{J}f$-invariant we see that σ_{i^*f} is differentiable with uniformly bounded derivative.

To locate the tangent bundle of $\sigma_{i^*f}(X(\varepsilon))$ we can consider the C^{r-1} bundle $\mathcal{L}$ over $X(\varepsilon)$

$$\mathcal{L}_x = L(T_xX,E_x) .$$

Then i^*f induces a natural map $\mathcal{L}(i^*f)$ on $\mathcal{L}(1)$ as follows. For any $P \in \mathcal{L}_x(1)$, $T_z(i^*f)(\text{graph } P) = \text{graph}(\mathcal{L}(i^*f)P)$ where we used triviality of E to translate T_xE to T_zE, $z = \sigma_f(x)$. In the local charts this becomes

$$P \mapsto (\tilde{C} + \tilde{K}P)\circ(\tilde{A} + \tilde{B}P)^{-1} .$$

As in (4.1) we see that $\mathcal{L}(i^*f)$ contracts $\mathcal{L}(1)$ into itself with strength $\doteq \|N_p^s f\|\cdot m(\bar{T}_p f)$. For $\|\tilde{B}\|, \|\tilde{C}\| \rightrightarrows 0$ as $\tilde{N} \to N$ and $\varepsilon \to 0$ subordinately. (Note since f is not fiber preserving $B \not\equiv 0$ as it was in (6.7). Also we needed the sum Finsler on $T_\Lambda M$ to replace $m(N^u f \oplus \bar{T}f)$ by $m(\bar{T}f)$.) Thus, $\mathcal{L}(i^*f)$ is an (r-1)-fiber contraction when $\tilde{N}$ is near N and ε is small. In particular, the tangent bundle of σ_{i^*f} is continuous because it gives the $\mathcal{L}f$-invariant section of $\mathcal{L}(1)$; i.e., σ_{i^*f} is C^1. Also, $\mathcal{L}(i^*f)$ is C^{r-1}-uniform respecting the natural charts on $\mathcal{L}$, as in (6.7). Thus, (6.7: r-1) applied to $\mathcal{L}(i^*f)$ gives a unique $\mathcal{L}(i^*f)$-invariant section which is C^{r-1}-uniform. This makes σ_{i^*f} and

$\omega^u = \exp\circ i_*\circ\sigma_{i*f}$ C^r-uniform.

To plaquate ω^u exactly on $X(\varepsilon)$ may be too hard. Instead consider $W_0^u = \sigma_{i*f}(X(\omega'\varepsilon))$ where $\omega' < 1$ is as above. We know $i*f(W_0^u) \supset W^u$. Rescaling all plaques in $\mathcal{B}$ by a factor on the order of $(1-\omega')^{-1}$, we can plaquate a neighborhood of $X(\omega'\varepsilon)$ in $X(\varepsilon)$ in such a way that one plaque is centered at each point of $X(\omega'\varepsilon)$. Call the new plaquation $\mathcal{B}_1$, the union of its plaques X_1, and $X_0 = X(\omega'\varepsilon)$. By the Chain Rule and C^r-uniformity of σ_{i*f} as in (6.7), $\{\exp\circ i_*\circ\sigma_{i*f}\circ\beta\colon \beta\in\mathcal{B}_1\}$ C^r-plaquates ω^u with a plaque centered at each point of X_0.

To see that ω^u is a C^1 leaf immersion is not hard. Let $\hat{N}^u$, $\hat{T}$, $\hat{N}^s$ be continuous extensions of N^u, $\bar{T}$, N^s to a neighborhood of $\Lambda = \overline{i(V)}$. Let $\hat{L}$ be the continuous bundle defined near Λ such that

$$\hat{L}_p = L(\hat{N}^u\oplus\hat{T},\hat{N}^s) .$$

Then Tf induces a contraction $\hat{L}f\colon \hat{L}_p(1) \to \hat{L}_{fp}(1)$ in the natural way, for p near Λ,

$$\hat{L}f(P) = (\hat{C}+\hat{K}P)(\hat{A}+\hat{B}P)^{-1} \qquad Tf = \begin{bmatrix} \hat{A} & \hat{B} \\ \hat{C} & \hat{K} \end{bmatrix} \qquad \text{resp.} \quad (\hat{N}^u\oplus\hat{T})\oplus\hat{N}^s .$$

By construction f overflows $\omega^u|X_0$, and so over its closure there is a unique $\hat{L}f$-overflowing invariant section. By uniqueness it is clear that this section is the tangent planes to $\omega^u X(\varepsilon)$ and that at Λ the section is $\underline{N^u\oplus\bar{T}}$. That is, we have found the extended 1-tangent to ω^u and proved that $T\omega^u T_V X(\varepsilon) = N^u\oplus\bar{T}$. It remains to prove $X(\varepsilon)$ is complete respecting the ω^u-pull back metric. Let $\{x_n\}$ be a Cauchy sequence in $X(\varepsilon)$ respecting the ω^u-pull back metric. In the uniform charts, it is clear that the chart representation of $\{\sigma_{i*f}(x_n)\}$ is Cauchy and so x_n converges in the chart metric. Hence it converges in the ω^u-pull back metric. This completes the proof that ω^u is a C^1 leaf immersion.

Finally, we prove that f is r-normally <u>contractive</u> at ω^u. We need to construct a Tf-invariant splitting $\check{T}\oplus\check{N}$ over $\omega^u(X(\varepsilon))$ such that $\check{T}$ is the extended tangent of ω^u and $\check{N}$ is sharply contracted. $N^s f$ is not a monomorphism because we trivialized N^s, so we must be a little careful.

Call M_0 the original manifold on which the diffeomorphism f was defined. By invariance, $\omega^u(X(\varepsilon)) \subset M_0$. Using $\underline{f^{-1}}$ on M_0 we can construct $\check{N}_0$ Tf-invariantly such that $\check{T}\oplus\check{N}_0 = TM_0$ over $\omega^u X(\varepsilon)$ and $\check{N}_0 = N^s$ at Λ. See [24]. Then

let $\check{N}$ be $\check{N}_0 \oplus \mathrm{Vert}_0(\zeta)$ where ζ was the bundle over M_0 trivializing N^s at Λ. By continuity this N is sharply contracted, for small ε, since N^s is sharply contracted at Λ.

By (6.6) $\omega^u|X_0$ is a C^r leaf immersion. By invariance, ω^u is a C^r leaf immersion. This completes the proof of (6.1) parts (a), (d). Parts (b), (c) (uniqueness and characterization in $i^*\eta$) are proved as in (4.1) using the uniform charts. Likewise part (g), Linearization. Part (e), Lamination, has already been proved in §5.

Part (f), permanence under perturbation, is attacked as follows. If f' is near f and $z \in i^*\eta(\varepsilon)$ then there is a unique point z' in $i^*\eta$ near $i^*f(z)$ such that $\exp\circ i_*(z') = f'(\exp i_*(z))$. Thus, f' pulls back to i^*f' near i^*f, $i^*f'(z) = z'$. The construction of ω^u given above works for f' near f: the main thing to observe is that the same uniform E-charts serve to prove i^*f'-overflows the neighborhood of V, making the graph transform $(i^*f')_\#$ well defined. Likewise the proofs of smoothness work just as well when f' replaces f and f' is near f. The resulting section is C^r near that of f. Thus we get a C^r $W^u_{f'} \subset i^*\eta(\varepsilon)$ which is i^*f'-overflowing invariant and C^r near W^u_f. Dealing with f^{-1} and f'^{-1} gives $W^s_{f'}$ and $V' = W^u_{f'} \cap W^s_{f'}$.

Then $g_{f'}: V \to i^*\eta(\varepsilon)$ is an i^*f'-invariant section where $g_{f'}(V) = V'$. We define $i': V \to M$ to make

$$\begin{tikzcd} V' \arrow[r, "i_*"] & TM \arrow[d, "\exp"] \\ V \arrow[u, "g_{f'}"] \arrow[r, "i'"] & M \end{tikzcd}$$

commute. Using the uniform charts as in (4.1(c)), we see that for each $q \in V$, $g_{f'}(q) = q'$ is the unique point of $i^*\eta_q$ such that

$$(i^*f')^n(q') \in i^*\eta(\varepsilon) \qquad \text{for all} \qquad n \in \mathbb{Z}$$

and similarly that $W^u_{f'}$ or $W^s_{f'}$ consists of the points whose backward or forward i^*f'-orbits remain in $i^*\eta(\varepsilon)$. Similar remarks hold for the strong stable and unstable laminations of $W^s_{f'}$, $W^u_{f'}$.

From the preceding characterization of $g_{f'}$ it is clear that i' is the unique f'-leaf immersion near i such that $i(q) \in \exp_{i(q)}\eta(\varepsilon)$ for all $q \in V$. In this sense, we can say i' is "essentially unique" or "unique modulo η".

Summing this up we state

(6.8) *PERMANENCE THEOREM. Let* f, η *be as in* (6.1). *If* f' *is a* C^r *diffeomorphism of* M *which is* C^1 *near* f *then there is a section* $g_{f'}: V \to i^*\eta$ *such that* $(i^*f')^n(g_{f'}(q)) \in i^*\eta(\varepsilon)$ *for all* $n \in \mathbf{Z}$, $q \in V$. *This* $g_{f'}$ *is unique among all sections of* $i^*\eta$, *continuous or not. Besides,* $g_{f'}$ *is* i^*f'*-invariant, is of class* C^r, *and tends* C^r *to* 0 *as* f' *tends* C^r *to* f. *The sets* $W^u_{f'} = \bigcap_{n\geq 0}(i^*f')^n i^*\eta(\varepsilon)$, $W^s_{f'} = \bigcap_{n\leq 0}(i^*f')^n i^*\eta(\varepsilon)$ *are* C^r *manifolds intersecting transversally at* $V' = g_{f'}(V)$. *They are* C^r *laminated by sets of sharply* i^*f'*-asymptotically equivalent points. These* C^r *laminations and the manifolds* $W^u_{f'}$, $W^s_{f'}$ *tend* C^r *to those for* f *as* f' *tends* C^r *to* f. *The map* $i' = \exp\circ i_*\circ g_{f'}$ *is a* C^r *leaf immersion at which* f' *is* r*-normally hyperbolic. Modulo* η, *it is the unique* f'*-invariant leaf immersion near* i.

§6A. <u>Forced Smoothness of $i: V \to M$</u>. In this appendix we generalize (4.1d) to leaf immersions. As usual M is a complete C^∞ Riemann manifold.

(6A.1) *THEOREM. If* $f: M \to M$ *is a* C^r *diffeomorphism which is* r*-normally hyperbolic to the boundaryless* C^1 *leaf immersion* $i: V \to M$ *then there is an isotopy of* V, $h_t: V \to V$, $0 \leq t \leq 1$, *such that* $h_0 =$ *identity and* $\tilde{i} = i\circ h$, *is a* C^r *leaf immersion,* $\tilde{i}: V \to M$, *and* f *is* r*-normally hyperbolic at* $\tilde{i}$.

Remark. (6A.1) says that V was really C^r immersed. For instance if V is a compact submanifold of M then (6A.1) says V is C^r, see (4.1d). The isotopy h_t takes place on V, not M, and is C^1 small.

To prove (6A.1) we use the following lemma which is a generalization of the fact that a C^1 diffeomorphism between C^r manifolds can be C^1 approximated (in the Whitney sense if the manifolds are noncompact) by a C^r diffeomorphism [33].

(6A.2) *LEMMA. Let* $w: W \to M$ *be a* C^r *immersion,* $r \geq 1$. *If* $Gw: W \to GM$ *is also of class* C^r *then* w *is isotopic along* W *to a* C^{r+1} *immersion* $\tilde{w}: W \to M$.

Remark. The hypothesis of (6A.2) is not absurd. For example, let $w: S^1 \to R^2$ be any C^1 embedding of S^1 onto itself which is nowhere C^2. Then the map $Gw: S^1 \to GR^2$ is of class C^1 even though $Tw: TS^1 \to TR^2$ is only continuous.

Proof of (6A.2). W and M are C^∞ manifolds and have C^∞ atlasses. At each point q of W there is an open disc D_q which w embeds into M. The embedded disc is a C^{r+1} submanifold of M since Gw is of class C^r. Hence there are a pair of charts, one for W and one for M, in which $w|D_q$ appears to be a C^r map from D^w into $R^w \times 0 \subset R^m$. The W chart is C^∞ and the M chart is C^{r+1} (since $w(D_q)$ is a C^{r+1} disc). By convolution approximation [20] in these charts, we find a C^{r+1} map $w_q: D_q \to M$ such that $w_q(D_q) = w(D_q)$ and w_q is C^r near $w|D_q$.

The $\{w_q\}$ give a C^{r+1} structure on W which is the one it inherits as a subset of M. (It is *not* just the w-pull back of the C^∞ structure of M.) Let $\tilde{W}$ denote W with this C^{r+1} structure and consider the pointwise identity map $i: W \to \tilde{W}$. This i is a C^r diffeomorphism of the C^∞ manifold W onto the C^{r+1} manifold $\tilde{W}$. (i is not C^{r+1} if w is not C^{r+1}.) By [33] there is C^r approximation to i, $i_1: W \to \tilde{W}$, which is a C^{r+1} diffeomorphism. Any small perturbation of a diffeomorphism can be achieved by isotopy [33] and so there is an isotopy $i_t: W \to \tilde{W}$ starting at $i_0 = i$ and ending at i_1.

Finally, we put $w_t = w \circ i^{-1} \circ i_t$ and claim that w_1 is a C^{r+1} immersion. This can be verified in the charts for W, M used to construct the $\{w_q\}$ because those charts were C^{r+1}.

Proof of (6A.1). If $r = 1$ there is nothing to prove so suppose $r \geq 2$ and (6A.1) holds for $r-1$. Intrinsically the manifold V is of class C^∞, as in any C^1 manifold [33]. We just want to prove that the "wrong" leaf immersion was chosen to represent V.

Let $\tilde{N}^u$, $\tilde{T}$, $\tilde{N}^s$ be C^∞ subbundles of TM which C^0 approximate N^u, $\bar{T}$, N^s on Λ. Consider the C^∞ vector bundle $\tilde{L}$ whose fiber at z near Λ is

$$\tilde{L}_z = L(\tilde{N}^u_z \oplus \tilde{T}_z, \tilde{N}^s_z) .$$

Tf acts naturally on the unit disc $\tilde{L}_z(1)$, by $P \mapsto (\tilde{C} + \tilde{K}P) \circ (\tilde{A} + \tilde{B}P)^{-1}$ where

$$Tf = \begin{bmatrix} \tilde{A} & \tilde{B} \\ \tilde{C} & \tilde{K} \end{bmatrix} \quad \text{resp.} \quad (\tilde{N}^u \oplus \tilde{T}) \oplus \tilde{N}^s .$$

Let $\tilde{L}f$ be this fiber preserving map $\tilde{L}(1) \to \tilde{L}$ covering f. As in §§4,6, it is easily checked that $\tilde{L}f$ contracts fibers and sends $\tilde{L}_z(1)$ into $\tilde{L}_{fz}(1)$, at least if z is near Λ. Besides, the fiber contraction rate of $\tilde{L}f$ is approximately

$k_p\alpha_p^{-1}$, $p \in \Lambda$, where $k_p = \|N_p^s f\|$, $\alpha_p = m(\bar{T}_p f)$.

Now consider the unstable manifold for f at V, $\omega^u: W^u \to M$ where

$$W^u = \text{graph } \sigma_{i^*f} \qquad \omega^u = i_*|W^u$$

and $\sigma_{i^*f}: X \to E$ was the i^*f-invariant section constructed in §6. By (6.1), ω^u is a C^1 leaf immersion.

The pull back of $\tilde{L}$ to W^u, $\omega^{u*}(\tilde{L})$, is a C^1 bundle over W^u. The sharpness of the fiber contraction of $\omega^{u*}(\tilde{L}f)$ is $\doteq k_p\alpha_p^{-1}$ which is < the base contraction $\doteq \alpha_p$, by r-normal hyperbolicity. By (6.5) there is a unique $\omega^{u*}(\tilde{L}f)$-invariant section of $\omega^{u*}(\tilde{L})$ and it gives a C^1 leaf immersion into $\tilde{L}$. Since TW^u is i^*f-invariant, we get by uniqueness that $G\omega^u: x \mapsto T_{ix}\omega^u(T_xW^u)$ is a C^1 leaf immersion into GM at which Gf is $r-1$ normally contractive.

By induction on r we cannot conclude that $G\omega^u$ is C^{r-1} because W^u has a boundary.

But, applying everything to f^{-1}, we get $G\omega^s: W^s \to GM$, a C^1 leaf immersion. Since $\bar{T}_p = (N_p^u \oplus \bar{T}_p) \cap (\bar{T}_p \oplus N_p^s)$, we see that $Gi: V \to GM$ is also a C^1 leaf immersion. [This does not imply that i is C^2 -- see the remark after the statement of (6A.2).].

By (6A.2), i is isotopic to i_1 along V, where i_1 is a C^2 leaf immersion. For Gi and i are C^1. When $r = 2$, this completes the proof of (6A.1), so suppose $r \geq 3$.

By (6.4), Gf is $(r-1)$-normally hyperbolic to the C^1 leaf immersion Gi_1. (Note that we needed the C^2 leaf immersion i_1 in (6.4), but i was only C^1.) By (6A.1: r-1) applied to Gf there is an isotopy of V, h_t, such that $Gi_1 \circ h_1 = G(i_1 \circ h_1)$ is a C^{r-1} leaf immersion. That is, $i_1 \circ h_1$ is a C^{r-1} leaf immersion and $q \mapsto G(i_0 h_1)(q)$ is also C^{r-1}. By (6A.2) $i_1 \circ h_1$ is isotopic along V to a C^r leaf immersion $\tilde{i}$. Since $\tilde{i}$ is just a reparameterization of i, it is clear that f is normally hyperbolic to $\tilde{i}$ as claimed.

§6B. <u>Branched Laminations</u>. In this appendix we deal with some global phenomena naturally arising from a leaf immersion. As usual, M is a C^∞ complete Riemann manifold.

Definition. A C^r boundaryless leaf immersion $i: V \to M$ is a C^r *branched lamination* of $\Lambda \subset M$ if and only if $i(V) = \overline{i(V)} = \Lambda$. A lamina of i is the restriction of i to a connected component of V.

Strictly speaking, we should say "possibly branched" instead of "branched." If all the laminae are unbranched, then we have an *unbranched lamination* -- which is what we call a lamination in §7.

A branched lamination is a sort of foliation whose leaves are branched manifolds of Williams [50]. Interestingly enough, our laminae seem to form a proper subclass of all possible branched manifolds.

(6B.1) *THEOREM. If* $i: V \to M$ *is a* C^r *boundaryless leaf immersion, then there is a natural maximal branched lamination* $u: u \to M$ *such that* $u(u) = \Lambda = \overline{i(V)}$ *and one lamina of* u *is* i.

There is a plaquation $\{\rho\} = P$ of V by (6.2). Since $\{i \circ \rho\}$ is C^r precompact let us call "plaques" all the $i \circ \rho$ plus all their limits, say $\{\beta\} = \mathcal{B} \subset \mathrm{Emb}^r(D^v, M)$. We must build laminae in addition to i. We will do so by gluing together plaques from $\mathcal{B}$. In case $\dim V = 1$, this is fairly trivial. When $\dim(V) \geq 2$, it is not even clearly possible. The following definition helps us organize new laminae.

Definition. A finite union of plaques $\beta_0 \cup \cdots \cup \beta_k$ is *well branched* (respecting i) if and only if for every $\varepsilon > 0$ there are plaques $\rho_0, \ldots, \rho_k \in P$ such that $\rho_0 \cup \cdots \cup \rho_k \subset V$ is connected and $d_r(i \circ \rho_j, \beta_j) < \varepsilon$. By d_r we mean a fixed metric on $\mathrm{Emb}^r(D^v, M)$. For instance, any single plaque $\beta \in \mathcal{B}$ is well branched.

For convenience, we often deal with restrictions of the plaques $\rho \in P$, $\beta \in \mathcal{B}$. Call

$$\rho^a = \rho | aD^v \qquad \beta^a = \beta | aD^v .$$

If a is small then

$$\rho_1^a \cap \rho_2^a \neq \emptyset \Rightarrow \rho_1^a \subset \rho_2 \text{ and } \rho_2^a \subset \rho_1 .$$

Hence

$$\rho_{1n}^a \cap \rho_{2n}^a \neq \emptyset , \quad n = 1,2,3,\ldots$$

$$\rho_{1n} \to \beta_1 , \quad \rho_{2n} \to \beta_2 \quad \text{as} \quad n \to \infty$$

$$\Rightarrow \beta_1^a \cup \beta_2^a \subset \beta_1 \cap \beta_2 .$$

If we say β_1 and β_2 are *unbranched* whenever their union is contained in some embedded r-disc then, replacing P with $\{\rho^a\}$ for some small a, we can assume

$$\rho_{1n} \cap \rho_{2n} \neq \emptyset \ , \quad n = 1,2,3,\ldots$$

$$\text{(U)} \qquad \rho_{1n} \to \beta_1 \ , \quad \rho_{2n} \to \beta_2 \quad \text{as} \quad n \to \infty$$

$$\Rightarrow \ \beta_1 \text{ and } \beta_2 \text{ are unbranched} \ .$$

To prove (6B.1) we use

(6B.2) *LEMMA. Let* $B = \beta_0 \cup \cdots \cup \beta_k$ *be well branched and* $p \in \mathcal{B}$ *be given. Then there is a well branched extension* $\beta_0 \cup \cdots \cup \beta_k \cup \beta_{k+1}$ *with* $\beta_{k+1} \in \mathcal{B}$ *centered at* p.

Proof. There exist sequences $\rho_{jn} \in P$ with

$$d_r(\beta_j, i \circ \rho_{jn}) \to 0 \quad \text{as} \quad n \to \infty$$

$$\rho_{0n} \cup \cdots \cup \rho_{kn} \quad \text{connected} \ .$$

Since $p \in \beta_j$ for some j there is a sequence $p_{jn} \in \rho_{jn}$ such that $i(p_{jn}) \to p$. See the figure.

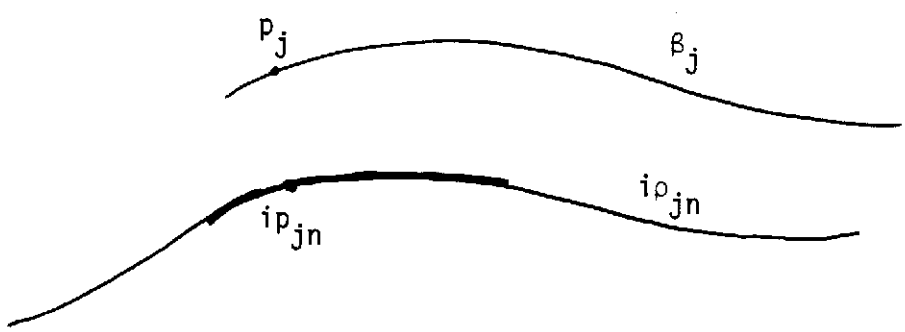

Choose a plaque $\rho_{k+1\,n}$ centered at p_{jn} and choose a subsequence (unrelabeled) so that $i_0\rho_{k+1\,n}$ converges to some β_{k+1} in $\mathcal{B}$ as $n \to \infty$. Clearly $\rho_{0n} \cup \cdots \cup \rho_{k+1\,n}$ is connected, so $\beta_0 \cup \cdots \cup \beta_{k+1}$ is well branched. Q.E.D.

Proof of (6B.1). Choose any $\beta_0 \in \mathcal{B}$ and any $p_1 \in \partial\beta_0$. Select $\beta_1 \in \mathcal{B}$ centered at p_1 so that $\beta_0 \cup \beta_1$ is well branched. Choose any $p_2 \in \partial\beta_0 - (\beta_0 \cup \beta_1)$, if possible, and add β_2 at p_2 so that $\beta_0 \cup \beta_1 \cup \beta_2$ is well branched. Continue until all of $\partial\beta_0$ is covered by plaques. Compactness of $\partial\beta_0$ and $\mathcal{B}$ insure this can be done with finitely many $\beta \in \mathcal{B}$. Then proceed to cover the so far uncovered

points of $\partial\beta_1$, etc. etc. We get a countable family of plaques $\{\beta_j\} \subset \mathcal{B}$ such that

(a) $\beta_0 \cup \cdots \cup \beta_k$ is well branched, $0 \leq k < \infty$

(b) $\rho_{jn} \cap \rho_{kn} = \emptyset$ for all $k >$ some $K(j)$ independent of n

for some sequence $\{\rho_{jn}\}$ in $\mathcal{P}$ with $\rho_{jn} \to \beta_j$ as $n \to \infty$. (a) follows from (6B.2) and (b) from construction, compactness of $\mathcal{B}$, etc.

Now we build a manifold by identifying $\mathbb{Z}_+ \times \mathrm{Int}(D^V)$ under

$$(j,x) \leftrightarrow (k,y) \Leftrightarrow \begin{array}{l} \beta_j(x) = \beta_j(y) \text{ and} \\ \rho_{jn} \cap \rho_{kn} \neq \emptyset \text{ for all large } n . \end{array}$$

Note that this is an equivalence relation. Call the identification space B and let

$$U_{jk} = \{x \in \mathrm{Int}(D^V) \colon (j,x) \leftrightarrow (k,y) \text{ for some } y \in \mathrm{Int}(D^V)\} .$$

For each $x \in \mathrm{Int}(D^V)$ consider

$$U_j(x) = \bigcap_{x \in U_{jk}} U_{jk} .$$

$U_j(x)$ is a neighborhood of x since U_{jk} is open, and from (b), there are $\leq K(j)$ values of k such that $U_{jk} \neq \emptyset$.

Now we cover B with charts

$$\begin{aligned} U_j(x) &\to B \\ x' &\mapsto [(j,x')] = \text{equivalence class of } (j,x') . \end{aligned}$$

Chart transfers are maps

$$\beta_k^{-1} \circ \beta_j | U_j(x)$$

such that $\rho_{jn} \to \beta_j$, $\rho_{kn} \to \beta_k$, and $\rho_{jn} \cap \rho_{kn} \neq \emptyset$. By (U), β_j and β_k are unbranched, so this $\beta_k^{-1} \circ \beta_j$ is a C^r map defined on an open subset of D^V, i.e., B is a C^r manifold.

The natural map

$$\begin{aligned} b \colon B &\longrightarrow M \\ [(j,x)] &\to \beta_j(x) \end{aligned}$$

is clearly a well-defined C^r immersion with extended tangent contained in $\bar{T}$.

To prove b is a C^1 leaf immersion we must show B is complete respecting a b pullback Finsler from TM. This follows easily from compactness of B. Also, since $b(B)$ is composed of limit plaques, it is clear that b is a C^r leaf immersion $r \geq 2$. Its extended r-tangent bundle is contained in $\bar{T}^r$.

Finally, let U be the disjoint union of all such manifolds B we can construct as above and let u be the union of the leaf immersions $b: B \to M$. Then $u: U \to M$ is a leaf immersion with $u(U) = \Lambda$, completing the proof of (6B.1).

(6B.3) *COROLLARY. If* $i_0: V_0 \to M$ *is a boundaryless leaf immersion, with* $\overline{i_0 V_0} = M$ *and* f *is normally hyperbolic at* i_0, *then there are natural branched laminations* $\mathcal{W}^u$, $\mathcal{W}^s$ *of* M *tangent to* $N^u \oplus \bar{T}$, $\bar{T} \oplus N^s$ *and invariant under* f.

Proof. By (6B.1) there is $i: V \to M$ a leaf immersion with $i(V) = M$. By (6.1) there are leaf immersions w^u, w^s for i. Their laminae form $\mathcal{W}^u$, $\mathcal{W}^s$.

(6B.4) *COROLLARY. For* i_0, f *as above, the strong unstable and strong stable plaque families of* (5.5) *form unbranched laminations of* M *subordinate to* $\mathcal{W}^u$, $\mathcal{W}^s$.

Proof. Since the plaque families are self coherent, the proof of (6B.2) produces injectively immersed laminae everywhere tangent to N^u and N^s.

§7. <u>Normally Hyperbolic Foliations and Laminations</u>. In this section we apply the results of §§4,6 to foliations and laminations. Let us recall these definitions.

A continuous foliation of a manifold M (with leaves of dimension k) is a disjoint decomposition of M into k-dimensional injectively immersed connected submanifolds -- "leaves" -- such that M is covered by C^0 charts -- "foliation boxes" --

$$\phi: D^k \times D^{m-k} \longrightarrow M$$

and $\phi(D^k \times y) \subset$ the leaf through $\phi(0,y)$. The foliation is *of class* C^r if the charts ϕ can be chosen of class C^r.

Definition. A C^r *unbranched lamination* of M is a continuous foliation of M whose leaves are C^r coherently immersed submanifolds. That is, for $r = 1$, the tangent planes of the leaves give a continuous k-plane subbundle of TM. For $r \geq 2$, the r-th order tangent multiplane to the leaf at $p \in M$ depends continuously on p.

Convention. Unbranched lamination = lamination. See §§6, 6B, and later in §7 for more discussion of branched laminations.

Laminations occur naturally in dynamical systems as we saw in §§4, 5, 6. Also, the stable manifolds of a C^r Anosov diffeomorphism form a C^r lamination, not a C^r foliation in general [3]. The leaves of a lamination L will be called laminae. The tangent bundle of L, TL, refers to the tangent planes of all the laminae.

The following definitions generalize some ideas of dynamical systems to invariant laminations.

Definition. A diffeomorphism f of M *preserves the lamination* L if and only if it sends the lamina through p onto that through fp. We also say $f(L) = L$ or L is f-invariant.

Definition. If f, f' are diffeomorphisms of M preserving the laminations L, L' then (f,L) is *leaf conjugate* to (f',L') if and only if there is a homeomorphism h of M onto itself such that h carries laminae of L to laminae of L' and $hf(L) = f'h(L)$ for all laminae L of L.

Definition. If f preserves L then (f,L) is *structurally stable* if and only if f has a neighborhood N in $\mathrm{Diff}^1(M)$ such that each $f' \in N$ preserves some L' with (f,L) leaf conjugate to (f',L').

This definition of structural stability for laminations is a natural extension of the classical notion of structural stability of vector fields.

Definition. An *ε-pseudo orbit* of $f: M \to M$ is a bi-infinite sequence $\{p_n\}$ such that

$$d_M(f_n p_n, p_{n+1}) \leq \varepsilon \qquad n \in \mathbf{Z} .$$

For $n \geq 0$ this means: take p_0, apply f to produce $f(p_0)$, budge it by $\leq \varepsilon$ to produce p_1, apply f to produce $f(p_1)$, budge it by $\leq \varepsilon$ to produce p_2, etc.

Let L be a lamination of M. Think of the nonseparable, non-connected manifold V consisting of the laminae with their intrinsic (non-induced) topology. The inclusion $i: V \to M$ is a leaf immersion and has a plaquation P.

Definition. If $f: M \to M$ preserves the lamination L then a pseudo orbit $\{p_n\}$ *respects* P if and only if $f(p_n)$, p_{n+1} lie in a common plaque of P.

Definition. f is *plaque expansive* if there exists an $\varepsilon > 0$ with the following property. If $\{p_n\}$, $\{q_n\}$ are ε-pseudo orbits which respect P and if $d_M(p_n, q_n) \leq \varepsilon$ for all n then for each n, p_n and q_n lie in a common plaque.

Remark 1. The definition is independent of d_M and plaquations P with small plaques.

Remark 2. When we think of M laminated by its own points (zero-dimensional lamination) then "plaque expansive" becomes "expansive" as defined in [48]; "normally hyperbolic" becomes "Anosov."

Definition. A C^r diffeomorphism $f: M \to M$ is *r-normally hyperbolic to a* C^1 *lamination* L if and only if f preserves L and Tf is normally hyperbolic over TL. That is,

$$TM = N^u \oplus TL \oplus N^s , \qquad Tf = N^u f \oplus Lf \oplus N^s f ,$$

$$\inf m(N^u_p f) > 1 , \qquad \sup \|N^s_p f\| < 1 ,$$

$$\inf m(N^u_p)\|L_p f\|^{-r} > 1 , \qquad \sup \|N^s_p f\| m(L_p f)^{-r} < 1 .$$

It is easy to see that the laminae of a C^r lamination are the images of C^r leaf immersions.

Since the laminae are *injectively* immersed, f is normally hyperbolic to each one, as defined in §6. Thus, we have the canonical perturbation theory of (6.8) at our disposal. Interpreting the characterization in (6.8) in terms of pseudo orbits we get the following assertion where η is a smooth complement to TL. If f' is C^1 near f and $p \in M$ then there is a unique point $p' \in \exp_p \eta(\varepsilon)$ whose f'-orbit $\{f'^n(p')\}$ can be ε-shadowed by an f-pseudo orbit which respects P. We call the map $h_{f'}: M \to M$ the *canonical candidate* for a leaf conjugacy $h_{f'}(p) = p'$. By $\{x_n\}$ *ε-shadowing* $\{y_n\}$ we mean $d_M(x_n, y_n) \leq \varepsilon$ for all n.

(7.1) *THEOREM. Let* f *be* r*-normally hyperbolic to the* C^r *lamination* L. *If* f *is plaque expansive then* (f,L) *is structurally stable. The canonical candidate for the leaf conjugacy* $h_{f'}$ *is a leaf conjugacy. Moreover* f' *is* r*-normally hyperbolic and plaque expansive at* $L' = h_{f'}L$.

Remark 1. Less general theorems can be proved more easily: for instance we could have assumed L was a C^r foliation. Even with this assumption, however, L' will not in general be a C^1 foliation. Anosov gives an example of a linear hyperbolic automorphism f of T^6 which is ∞-normally hyperbolic at a linear foliation F but which can be perturbed (by C^r small analytic perturbations) so that the new invariant foliation is not C^1. This is why we deal with C^r laminations, not just C^r foliations, in the first place. Note also that (f',L') has the same properties as (f,L) had: r-normal hyperbolicity and plaque expansiveness. That is, the category of normally hyperbolic plaque expansive diffeomorphisms of laminations is closed under perturbations. However, there are several open fundamental questions about laminations; see below.

Remark 2. (7.1) gives a unified proof that Anosov diffeomorphisms, Anosov flows, and Anosov actions are structurally stable, using the orbit foliations. See the discussion following (7.3).

Remark 3. Verification that f is plaque expansive can be nontrivial in interesting cases.

Remark 4. If f is Anosov then W^u is plaque expansive. The proof is left to the reader.

Question 1. If f is normally hyperbolic at L then is f automatically plaque expansive? *Partial Answer:* Yes, if L is smooth (see (7.2)); yes if $f|TL$ is an isometry [11].

Question 2. If f is normally hyperbolic and plaque expansive at L then is W^u an *un*branched lamination? *Partial Answer:* Yes if L is smooth (i.e., L is a foliation).

Question 3. If f is normally hyperbolic and plaque expansive at L and W^u is a lamination, then is f plaque expansive at W^u? This is a combination of questions 1 and 2.

Question 4. If f is normally hyperbolic and plaque expansive at L then is L the unique f-invariant lamination tangent to TL?

Proof of (7.1). Let V be the disjoint union of the laminae of L with their leaf-topologies. Let $i: V \to M$ be the inclusion. Then i is a leaf immersion to which f is r-normally hyperbolic. If f' is C^r near f then by (6.8) there is an essentially unique leaf immersion $i': V \to M$ at which f' is r-normally hyperbolic. By definition, $h_{f'}(L_p) = i'i^{-1}(L_p)$. Hence, $L' = h_{f'}L$ is a C^r lamination of M if and only if $i': V \to M$ is a bijection.

Bijectivity of $i': V \to M$ is equivalent to bijectivity of $h_{f'}: M \to M$. Injectivity of $h_{f'}$ follows by plaque expansiveness. Let f be ε-plaque expansive and let U be a C^1 neighborhood of f so small that $d(h_{f'},\mathrm{id}) \leq \varepsilon/2$ for all $f' \in U$. By construction, there is a unique f-pseudo orbit which $\varepsilon/2$-shadows the f'-orbit through $h_{f'}(p)$:

$$f'^n(h_{f'}(p)) \in \exp_{p^n}\left(\eta_{p^n}\left(\tfrac{\varepsilon}{2}\right)\right) .$$

Indeed $h_{f'}(p^n) = f'^n(h_{f'}(p))$. Thus, if $h_{f'}(x) = h_{f'}(y)$ then there exist f-pseudo orbits $\{x^n\}$, $\{y^n\}$ through x, y which $\varepsilon/2$-shadow the same f' orbit; and so

$$d_M(x^n,y^n) \leq \varepsilon .$$

By ε-plaque expansiveness of f at L, the points x, y must lie in the same plaque. But $h_{f'}$ is an embedding of each plaque, so $x = y$, completing the proof of injectivity of $h_{f'}$.

Surjectivity of $h_{f'}$ is implied by continuity of $h_{f'}$ since $h_{f'}$ is near the identity. As in §6, i^*f' denotes the pull back of f' to $i^*\eta$. Let $\delta > 0$ be given. By the uniformities in the proof of (6.1c) there is an $N = N(\delta)$ such that if $z \in i^*\eta_p(\nu)$ has $|g_{f'}(p) - z| \geq \delta$ then $(i^*f')^n(z) \notin i^*\eta(2\nu)$ for at least one n, $|n| \leq N$. (This asserts that points z uniformly far from a uniformly normally

hyperbolic manifold are forced to leave a larger fixed neighborhood of it within a uniform time.) Interpreting this in M, we get:

(*) For any $\delta > 0$ there is an $N = N(\delta)$ such that if $f' \in \mathcal{N}$ and $d_M(p^n, f'^n(p')) \leq 2\nu$, $-N \leq n \leq N$, for some f-pseudo orbit $\{p^n\}$ and some $p' \in M$, then $d_M(p', h_{f'}(p^0)) < \delta$.

Now let $x \to p$ in M and suppose $d_M(h_{f'}(x), h_{f'}(p)) \geq \delta > 0$. Through x there is a unique f-pseudo orbit $\{x^n\}$ such that $h_{f'}(x^n) = f'^n(h_{f'}(x))$. By a diagonal process and the fact that $\mathcal{L}$ is a lamination, we can choose a subsequence of the x's tending to p such that $x^n \to p^n$ as $x \to p$, $n \in \mathbf{Z}$. Clearly $\{p^n\}$ is an f-pseudo orbit through p. It is probably *not* the f-pseudo orbit shadowing $\{f'^n(h_{f'}(p))\}$. However,

$$\begin{aligned} d_M\big(p^n, f'^n(h_{f'}(x))\big) &\leq d_M(p^n, x^n) + d_M\big(x^n, f'^n(h_{f'}(x))\big) \\ &\leq \nu + \nu = 2\nu \end{aligned}$$

for all n, $|n| \leq N$, and all x far enough along in our sequence of x's converging to p. By (*) we conclude $d_M(h_{f'}(x), h_{f'}(p)) < \delta$, a contradiction. Hence $h_{f'}$ is continuous, surjective, and $\mathcal{L}' = h_{f'}\mathcal{L}$ is an f'-invariant C^r lamination. Clearly f' is r-normally hyperbolic at $\mathcal{L}'$.

Plaque expansiveness of f' at $\mathcal{L}' = h_{f'}(\mathcal{L})$ is a consequence of $(f', \mathcal{L}')$ being leaf-conjugate to the plaque expansive $(f, \mathcal{L})$. If $\{x^n\}$, $\{y^n\}$ are f'-pseudo orbits then $\{h_{f'}^{-1}(x^n)\}$, $\{h_{f'}^{-1}(y^n)\}$ are f-pseudo orbits. Thus, if $d_M(x^n, y^n)$ is always very small then $d_n(h_{f'}^{-1}(x^n), h_{f'}^{-1}(y^n)) < \varepsilon$ for all n and so $h_{f'}^{-1}(x^0)$, $h_{f'}^{-1}(y^0)$ lie in a common $\mathcal{L}$-plaque since f is plaque expansive. Therefore, x^0, y^0 lie in common $\mathcal{L}'$-plaque proving that f' is plaque expansive. This completes the proof of (7.1).

The next theorem gives a sufficient condition for plaque expansiveness.

(7.2) *THEOREM. If* f *is a* C^1 *diffeomorphism of* M *which is* 0*-normally hyperbolic at the* C^1 *foliation* $\mathcal{F}$ *then* f *is plaque expansive.*

Remark. More generally it seems that $\mathcal{F}$ could be a Lipschitz foliation.

Proof of (7.2). It suffices to prove that some iterate of f is plaque expansive. Fixing a Riemann structure on TM and a high iterate of f we may assume

$$m(N_p^u f) \geq \lambda \quad , \quad \|N_p^s f\| \leq \lambda^{-1}$$
$$\lambda > 2$$

for all $p \in M$. As usual by $N^u f$, $N^s f$ we mean $Tf|N^u$, $Tf|N^s$.

Define a new Finsler on TM by

$$|z| = \max(|x|,|v|,|y|)$$

where $z = x \oplus v \oplus y \in N_p^u \oplus T_p F \oplus N_p^s$, $p \in M$.

The *length* of a C^1 path $g: [0,1] \to M$ is defined to be $L(g) = \int_0^1 |g'(t)|dt$. The distance from p to q in M is

$$d_M(p,q) = \inf L(g)$$

where g ranges over all C^1 paths from p to q.

The *normal length* of such a path g is

$$L_N(g) = \int_0^1 |\pi g'(t)|dt$$

where $\pi: TM \to N^u \oplus N^s$ is the bundle projection with kernel TF. Since F is a C^1 foliation, any curve which is everywhere tangent to the leaves of F lies in a single leaf. (This is false for laminations in general.) Thus, $L_N(g) = 0$ if and only if g maps into a leaf of F. If $d_M(p,q) < \nu$ then we define

$$d_N^\nu(p,q) = \inf \{L_N(g): L(g) \leq \nu \text{ and } g \text{ is a } C^1 \text{ path from } p \text{ to } q\} .$$

The following estimate is a consequence of F being a C^1 foliation:

$$(1) \qquad \frac{d_N^\nu(p,q)}{d_N^{\nu'}(p',q')} \rightrightarrows 1 \quad \text{where} \quad \begin{cases} \nu,\ \nu' \to 0 \\ \operatorname{diam}\{p,p',q,q'\} \leq \min(\nu,\nu') \\ d_N(p,p') = 0 = d_N(q,q') \end{cases}$$

Here is a proof. M can be covered by a finite family of C^1 foliation boxes $\{\phi_i\}$

$$\phi_i: U_i \longrightarrow R^u \times R^v \times R^s$$

such that $T\phi_i$ carries $N^u_{p_i} \oplus TF_{p_i} \oplus N^s_{p_i}$ isometrically onto $R^u \oplus R^v \oplus R^s$, where $p_i = \phi_i^{-1}(0)$, and ϕ_i is nearly an isometry. Indeed the ϕ_i can be chosen so that $\{U_i'\}$ stills covers M when U_i' has half the radius that U_i had. As $\nu, \nu' \to 0$, (1) concerns only points p, p', q, q' and paths g well inside some U_i. Since ϕ_i is nearly an isometry, the ratio of the apparent length (or apparent normal length) of a path in $\phi_i(U_i)$ to its true length in M is nearly 1. Using the flat, product Finsler on $R^u \times R^v \times R^s$, (1) is trivial: the ratio in question is identically 1. This proves (1).

Our aim is to show that f is "d_N-expansive." Because of technical problems we shall not make this idea precise. However, an expansiveness estimate on L_N does arise naturally:

$$\max\{L_N(f^{-1}\circ g), L_N(f\circ g)\} \geq \frac{\lambda}{2} L_N(g) \tag{2}$$

for all C^1 paths g. To see this, write $\pi(z) = \pi^u(z) \oplus \pi^s(z) \in N^u \oplus N^s$, $z \in T_pM$. Put

$$A(g) = \{t \in [0,1]: |\pi^u g'(t)| \geq |\pi^s g'(t)|\}$$
$$B(g) = [0,1] - A(g) .$$

Then

$$L_N(g) = \int_{A(g)} |\pi^u g'(t)|dt + \int_{B(g)} |\pi^s g'(t)|dt$$

using the Lebesgue integral. Since Tf expands N^u and contracts N^s we get

$$A(f\circ g) \supset A(g) \qquad B(f^{-1}\circ g) \supset B(g) .$$

Therefore

$$L_N(f\circ g) \geq \int_{A(f\circ g)} |(N^u f)\circ\pi^u g'(t)|dt \geq \lambda \int_{A(g)} |\pi^u g'(t)|dt$$
$$L_N(f^{-1}\circ g) \geq \int_{B(f^{-1}\circ g)} |(N^s f^{-1})\circ\pi^s g'(t)|dt \geq \lambda \int_{B(g)} |\pi^s g'(t)|dt .$$

Adding these gives $L_N(f\circ g) + L_N(f^{-1}\circ g) \geq \lambda L_N(g)$ which implies (2).

Since F is a C^1 foliation, it has a plaquation $P = \{\rho\}$ which we consider fixed. We also fix a number λ_0, $2 < \lambda_0 < \lambda$.

Now we are ready to prove (7.2). Let $\{p^n\}$, $\{q^n\}$ be ε-pseudo orbits respecting $\mathcal{P}$ so that $d_M(p^n,q^n) < \varepsilon$ for all $n \in \mathbf{Z}$. If ε is small enoguh we shall show that p^0, q^0 lie in a common plaque.

Given any $\nu > 0$ we can find a $\nu' > 0$ so that $L(g) \leq \nu$ for all paths g with $L(f\circ g) \leq \nu'$ or $L(f^{-1}\circ g) \leq \nu'$. This is a restatement of the continuity of f and f^{-1}. Let $\sigma = \sup_n d_N^{\nu'}(p^n,q^n)$ and, if $\sigma \neq 0$, choose m so that

$$(3) \qquad \frac{d_N^{\nu'}(p^m,q^m)}{\sigma} \doteq 1 .$$

Call $p = p^m$, $q = q^m$. By choice of ν'

$$\begin{aligned} d_N^{\nu'}(fp,fq) &= \inf\{L_N(g)\colon g(0) = fp,\ g(1) = fq,\ L(g) \leq \nu'\} \\ &\geq \inf\{L_N(f\circ g)\colon g(0) = p,\ g(1) = q,\ L(g) \leq \nu\} \end{aligned}$$

and similarly for $f^{-1}p$, $f^{-1}q$. Hence (2) yields

$$(4) \qquad \max\left(d_N^{\nu'}(fp,fq), d_N^{\nu'}(f^{-1}p,f^{-1}q)\right) \geq \frac{\lambda}{2}\, d_N^{\nu}(p,q) .$$

Dividing (4) through by $d_N^{\nu}(p,q)$ and using (1) we get

$$(5) \qquad \frac{d_N^{\nu}(p^{m+1},q^{m+1})}{d_N^{\nu}(p^m,q^m)} \geq \frac{\lambda_0}{2} \quad \text{or} \quad \frac{d_N^{\nu}(p^{m-1},q^{m-1})}{d_N^{\nu}(p^m,q^m)} \geq \frac{\lambda_0}{2} .$$

This is valid for small ν since $\lambda_0 < \lambda$. But (5) is incompatible with (3) since $\lambda_0/2$ is fixed and > 1. Hence $\sigma = 0$ and p^0, q^0 lie in a common plaque. This completes the proof of (7.2).

The same proof adapts to perturbations of f and L, yielding

(7.3) *THEOREM. Let* $f\colon M \to M$ *be* 0-*normally hyperbolic to the* C^1 *foliation* $\mathcal{F}$. *Then there exists a neighborhood* $N \subset \mathrm{Diff}^1(M)$ *of* f *and a neighborhood* $\mathcal{V}$ *of* $\mathcal{F}$ *in the space of* C^1 *foliations of* M *such that if* $f' \in N$ *preserves* $\mathcal{F}' \in \mathcal{V}$ *then* f' *is plaque expansive at* $\mathcal{F}'$.

Remark. If f is 1-normally hyperbolic to $\mathcal{F}$ then (7.1) plus (7.2) implies that f' determines $\mathcal{F}'$, $(f,\mathcal{F}) \sim (f',\mathcal{F}')$, and thus f' is plaque expansive.

We now derive the classical structural stability theorems of Anosov, as well as their recent generalization to other Lie Group actions.

Recall that an Anosov flow on a compact manifold M is a C^1 action of $\mathbb{R}$ on M, $t \mapsto f_t \in \mathrm{Diff}^1(M)$, such that some f_t is normally hyperbolic to the orbit foliation F. It follows that all f_t, $t \neq 0$, are normally hyperbolic to F. Moreover, M has a Riemann structure making each f_t an isometry on leaves; consequently there is no branching in $W^u(f_t)$ or $W^s(f_t)$. Since the f_t commute, it follows from the characterization of strong stable and unstable leaves that $W^u(f_1)$ and $W^s(f_1)$ are invariant under the flow, and hence are the same for all t. We know that f_1 is plaque expansive by (7.2) since F is a C^1 foliation. From (7.1) we obtain the structural stability of Anosov flows. For let $\{f_t'\}$ be another flow which is C^1 near f_t and let F be its orbit foliation. By (7.1), f_1' leaves invariant a unique lamination F'' near F and there is a leaf conjugacy h from (f_1,F') to (f_1',F''). Since f_1' preserves F', its tangent preserves TF'. By (2.12), $TF' = TF''$. By van Kampen's Uniqueness theorem [20] we get $F'' = F'$. The leaf conjugacy $h: (f,F) \to (f',F')$ means that the flows $\{f_t\}$, $\{f_t'\}$ are orbit-conjugate, i.e. $\{f_t\}$ is structurally stable.

The case of Anosov diffeomorphisms is, in this context, trivial. An Anosov diffeomorphism amounts to a C^1 action of $\mathbb{Z}$ on M such that one f_t is normally hyperbolic to the orbit foliation F. (Orbits are finite or countable sequences of points.) The foliation is C^∞ and so the same arguments as for Anosov flows show that f_1 is structurally stable.

Similar arguments apply to Anosov actions of connected Lie Groups G on M. This means that G acts C^1, locally freely on M, and some $g \in G$ is 1-normally hyperbolic to the orbit foliation F. It follows that F is a C^1 stable foliation. For if F' is another foliation of M which is C^1 near F then one can obtain a diffeomorphism g' which is C^1 near g such that g' preserves F'; the leaf conjugacy from (g,F) to (g',F') resulting from (7.1,2) shows that F is structurally stable. The construction of g' is given in [21]. In case g lies on a 1-parameter subgroup $\{g_t\}$ of G, say $g = g_1$, one constructs g' by projecting the vector field $X(p) = \frac{d}{dt}\Big|_{t=0} g_t(p)$ into leaves of F'; g' is the time-one-map of the resulting flow.

The proofs of (7.1,2,3) can be adapted to deal with unbranched laminations of subsets of M. As in §6B, an unbranched lamination of a compact set $\Lambda \subset M$ is an injective leaf immersion $i: V \to M$ such that $i(V) = \Lambda$. We say that the lamination L of Λ is C^r *smoothable* if and only if at each $p \in \Lambda$, L extends to C^r foliation of a neighborhood of p in M. The various extensions need not be

coherent. This means L extends to a C^r pre-foliation of a neighborhood of Λ in M.

(7.4) *THEOREM. Let* f *be* r*-normally hyperbolic to the lamination* L *of* Λ, $r \geq 0$. (i) *If* L *is* C^1 *smoothable then* (f,L) *is plaque expansive.*
(ii) *Suppose* $r \geq 1$, (f,L) *is plaque expansive, and* f' *is* C^r *near* f. *Then the canonical candidate for a leaf conjugacy* $h_{f'}: \Lambda \to M$ *is a true leaf conjugacy,* $L' = h_{f'}L$ *is a* C^r *lamination,* f' *is* r*-normally hyperbolic at* L', *and* (f',L') *is plaque expansive.*

Proof of (i). This is an adaptation of the proof of (7.2). Let $\hat{N}^u$, $\hat{N}^s$ be fixed continuous extensions of N^u, N^s to a neighborhood of Λ in M. Let F_j be a C^1 foliation of U_j which extends $L \cap U_j$, $j = 1,\ldots,L$. Let V_j be a compact set interior to U_j and let enough F_j be chosen that $\Lambda \subset \bigcup_{j=1}^{L} V_j$. Clearly (f,L) is plaque expansive if and only if (f^K,L) is plaque expansive for some large K. Fixing a Riemann structure on TM, replacing f by a high iterate and choosing a small neighborhood U of Λ we may therefore assume

$$m(\hat{N}^u_{jkp}f) \geq \lambda , \qquad \|\hat{N}^s_{jkp}f\| \leq \lambda^{-1} , \qquad \lambda > 2$$

for all $p \in U$, where

$$Tf = \begin{bmatrix} \hat{N}^u_{jk}f & * & * \\ * & F_{jk}f & * \\ * & * & \hat{N}^s_{jk}f \end{bmatrix} \quad \begin{array}{l} \text{respecting} \quad \hat{N}^u \oplus TF_j \oplus \hat{N}^s \\ \qquad\quad \text{and} \quad \hat{N}^u \oplus TF_k \oplus \hat{N}^s . \end{array}$$

Making U smaller causes the entries labelled $*$ to become as small as need be.

Define new Finslers on $T_{U_j}M$ by

$$|z|_j = \max(|x|,|v|,|y|)$$

when $z = x \oplus v \oplus y \in \hat{N}^u_p \oplus T_pF_j \oplus \hat{N}^s_p$, $p \in U_j$. The length of a C^1 path $g: [0,1] \to U_j$ is defined to be $L_j(g) = \int_0^1 |g'(t)|_j dt$. The distance from p to q in U_j is $d_{U_j}(p,q) = \inf L_j(g)$ where g ranges over all C^1 paths from p to q in U_j. The *normal length* of such a g is

$$L_{jN}(g) = \int_0^1 |\pi_j g'(t)|_j dt$$

where $\pi_j: T_{U_j}M \to \hat{N}^u \oplus \hat{N}^s$ is the bundle projection with kernel TF_j. Since F_j is a C^1 foliation, a curve everywhere tangent to TF_j lies in a single leaf of F_j. Thus $L_{jN}(g) = 0$ if and only if g maps into a leaf of F_j. If $d_{U_j}(p,q) \leq \nu$ then we define

$$d^{\nu}_{jN}(p,q) = \inf \{L_{jN}(g): L_j(g) \leq \nu \text{ and } g \text{ is a } C^1 \text{ path in } U_j \text{ from } p \text{ to } q\} .$$

Since V_j is a compact subset interior to U_j, $\partial V_j \cap \partial U_j = \emptyset$ and the same proof as in (7.2) shows

$$(1_j) \quad \frac{d^{\nu}_{jN}(p,q)}{d^{\nu'}_{jN}(p',q')} \rightrightarrows 1 \quad \text{where} \quad \begin{array}{l} \nu, \nu' \to 0, \quad V_j \cap \{p,p',q,q'\} \neq \emptyset \\ \operatorname{diam} \{p,p',q,q'\} \leq \min(\nu,\nu') \\ d_{jN}(p,p') = 0 = d_{jN}(q,q') . \end{array}$$

The estimate (2) in (7.2) becomes

$$(2_{jk\ell}) \qquad \max\left(L_{kN}(f^{-1}\circ g), L_{\ell N}(f\circ g)\right) \geq \frac{\lambda}{2} L_{jN}(g)$$

for any C^1 path $g: [0,1] \to U_j$ such that $f^{-1}\circ g$, $f\circ g$ are paths in U_k, U_ℓ. To see this, write $\pi_i(z) = \pi_i^u(z) \oplus \pi_i^s(z)$ for $i = j, k, \ell$. Put

$$A_i(g_i) = \{t \in [0,1]: |\pi_i^u g_i'(t)| \geq |\pi_i^s g_i'(t)|\}$$
$$B_i(g_i) = [0,1] - A_i(g_i) \qquad i = j, k, \ell$$

for any path g_i in U_i. Then

$$L_{iN}(g_i) = \int_{A_i(g_i)} |\pi_i^u g_i'(t)| dt + \int_{B_i(g_i)} |\pi_i^s g_i'(t)| dt$$

using the Lebesgue integral, $i = j, k, \ell$. Since $\hat{N}^u_{j\ell} f$ expands, $\hat{N}^s_{j\ell} f$ contracts, $\hat{N}^u_{jk} f^{-1}$ contracts, and $\hat{N}^s_{jk} f^{-1}$ expands, we get

$$A_\ell(f\circ g) \supset A_j(g) \qquad B_k(f^{-1}\circ g) \supset B_j(g)$$

for any path g in U_j such that $f^{-1}\circ g$, $f\circ g$ are paths in U_k, U_ℓ. Therefore,

$$L_{\ell n}(f\circ g) \geq \int_{A_\ell(f\circ g)} |(\hat{N}^u_{j\ell} f)\circ\pi^u_j g'(t)|dt \geq \lambda \int_{A_j(g)} |\pi^u_j g'(t)|dt$$

$$L_{kN}(f^{-1}\circ g) \geq \int_{B_k(f^{-1}\circ g)} |\hat{N}^s_{jk} f^{-1}\circ\pi^s_j g'(t)|dt \geq \lambda \int_{B_j(g)} |\pi^s_j g'(t)|dt$$

which, when added, imply $(2_{jk\ell})$.

Fix a small plaquation P for L such that each plaque $\rho \in P$ lies in some single V_j, $1 \leq j \leq L$. Also fix a λ_0, $2 < \lambda_0 < \lambda$. Suppose $\{p^n\}$, $\{q^n\}$ are ε-pseudo orbits of f which respect P.

Given any $\nu > 0$ we can find $\nu' > 0$ so that $L_j(g) \leq \nu$ for all C^1 paths g in U_j with

$$L_\ell(f\circ g) \leq \nu' \quad \text{and} \quad f\circ g \text{ a path in } U_\ell$$

or

$$L_k(f^{-1}\circ g) \leq \nu' \quad \text{and} \quad f^{-1}\circ g \text{ a path in } U_k .$$

Let

$$\sigma_j = \sup d^{\nu'}_{jN}(p^n,q^n)$$

where the sup is taken over those n such that p^n or q^n lies in V_j. Since $\{V_j\}$ cover Λ, σ_j is well defined for some j's. If some $\sigma_j > 0$, choose j and m with

$$(3_j) \qquad \frac{d^{\nu'}_{jN}(p^m,q^m)}{\sigma_j} \doteq 1$$

$$\sigma_j \geq \sigma_i \quad \text{for all } i,\ 1 \leq i \leq L, \text{ for which } \sigma_i \text{ is defined.}$$

Since V_j is a compact set inside U_j, we may assume ν' is small enough so that $d^{\nu'}_{jN}(p^m,q^m)$ is well defined when one of p^m, q^m lies in V_j. Let us say p^m lies in V_j. Call $p = p^m$, $q = q^m$. Choose k, ℓ such that

$$f^{-1}(p) \in V_k \qquad f(p) \in V_\ell .$$

For small ν, $f^{-1}\circ g$, $f\circ g$ will be paths in U_k, U_ℓ for all paths g in U_j with $g(0) = p$ and $L_j(g) \leq \nu$. Thus by choice of ν'

$$d^{\nu'}_{\ell N}(fp,fq) = \inf \{L_{\ell N}(g)\colon g(0) = f(p),\ g(1) = fq,\ L_\ell(g) \leq \nu'\}$$
$$\geq \inf \{L_{\ell N}(f\circ g)\colon g(0) = p,\ g(1) = q,\ L_j(g) \leq \nu\}$$

and similarly for $f^{-1}p$, $f^{-1}q$. Hence $(2_{jk\ell})$ yields

$$(4_j) \qquad \max\left(d^{\nu'}_{\ell N}(fp,fq), d^{\nu'}_{kN}(f^{-1}p,f^{-1}q)\right) \geq \frac{\lambda}{2}\, d^{\nu}_{jN}(p,q) \ .$$

Dividing (4_j) by $d^{\nu}_{jN}(p,q)$ and using (1_j) we get

$$(5_j) \qquad \frac{d^{\nu}_{\ell N}(p^{m+1},q^{m+1})}{d^{\nu}_{jN}(p^m,q^m)} \geq \frac{\lambda_0}{2} \quad \text{or} \quad \frac{d^{\nu}_{kN}(p^{m-1},q^{m-1})}{d^{\nu}_{jN}(p^m,q^m)} \geq \frac{\lambda_0}{2}$$

for small ν. But $\lambda_0/2 > 1$ so (5_j) is incompatible with (3_j). Hence p^0, q^0 lie on a common plaque completing the proof of (7.4(i)).

Proof of (ii). The proof that $h_{f'}$ is an embedding $\Lambda \to M$ is the same as when $\Lambda = M$. Since $h_{f'}$ is covered by i', the canonical f'-invariant leaf immersion near i, $i'(V) = h_{f'}(L) = L'$ is also a lamination. By V we mean the disjoint union of the laminae of L with their leaf topologies.

$$\begin{tikzcd}
 & & V \arrow[dl, "i"'] \arrow[dr, "i'"] & & \\
f \arrow[r, hook] & M & \Lambda \arrow[l, hook'] \arrow[rr, "h_{f'}"] & \Lambda' \arrow[r, hook] & M \arrow[l, hook'] & f' \arrow[l, hook']
\end{tikzcd}$$

Again, plaque expansiveness of f' at L' is a consequence of (f',L') being leaf conjugate to (f,L) which is plaque expansive.

We now discuss conditions sufficient to guarantee that no branching takes place in the various laminations associated with a diffeomorphism f which is normally hyperbolic to a boundaryless leaf immersion $i: V \to M$.

Definition. A leaf immersion $i: V \to M$ has *unique path lifting* if whenever $\gamma: [0,1] \to i(V)$ is a C^1 path everywhere tangent to TV, and v_0 is any point in $i^{-1}\gamma(0)$, then there is a unique path $\hat{\gamma}: [0,1] \to V$ such that $\hat{\gamma}(0) = v_0$ and $i\hat{\gamma} = \gamma$.

This condition implies that no branching in $i(V)$ can occur. More precisely, if U_0, U_1 are neighborhoods of x_0, x_1 in V and $i(x_0) = i(x_1)$, then there are neighborhoods $V_j \subset U_j$ of x_j $(j = 0,1)$ such that $i_0(V_0) = i_1(V_1)$. It follows that there is a commuting diagram

$$\begin{tikzcd} V \arrow[d, "p"'] \arrow[dr, "i"] & \\ V_1 \arrow[r, "i_1"] & M \end{tikzcd}$$

where p is a covering space and $i_1 : V_1 \to M$ is an *injective* leaf immersion. For most purposes we can replace (i,V) by (i_1,V_1).

Suppose that (i,V) is a branched lamination L of M which has unique path lifting. Then (i_1,V_1), obtained as above, is an equivalent *unbranched* lamination. Moreover any C^1 path everywhere tangent to laminae must lie in a lamina. In particular the field TL of tangent planes to leaves of L is *uniquely integrable*: every submanifold tangent to leaves is contained in a leaf.

(7.5) *THEOREM. Let* $i: V \to M$ *be a* C^1 *boundaryless leaf immersion. Then* (i,V) *has unique path lifting in each of the following cases* (a), (b), (c):

(a) *There is a* C^1 *diffeomorphism* $f: M \to M$ *which is* 1-*normally hyperbolic to* V *and either*

(i) Tf *is an isometry on* TV;

or (ii) $N^s = 0$ *and* $\|Tf|TV\| \leq 1$;

or (iii) $N^u = 0$ *and* $\|Tf^{-1}|TV\| \leq 1$;

(b) *There is a* C^1 *lamination* L *of* M *and diffeomorphism* f *which is* 1-*normally hyperbolic to* L *such that* $V = W^u$ *or* W^s *of* (f,L) *and* L *has unique path lifting.*

(c) (i,V) *is a* C^1 *foliation of* M.

Proof. To prove (a)(i) let $\rho \subset i(V)$ be a plaque at $x \in M$. Let $\gamma: [0,1] \to M$ be a C^1 path in $i(V)$ tangent everywhere to TV with $\gamma(0) = x$. It suffices to prove that there exists $\varepsilon > 0$ with $\gamma([0,\varepsilon)) \subset \rho$.

Suppose not. Then for every $\delta > 0$ there exist $z \in \gamma[0,1]$ and $y \in \rho$ such that $z \notin \rho$ and

$$z = \exp(Z) , \quad Z \in (N^u \oplus N^s)_y , \quad |Z| < \delta$$

$$d_M(x,y) < \delta \quad \text{and} \quad d_M(x,z) < \delta .$$

Since Tf is isometric on TV, it follows that

$$d_M(f^n x, f^n y) < \delta$$

and

$$d_M(f^n x, f^n z) < \delta$$

for all $n \in \mathbf{Z}$. Therefore

$$d_M(f^n y, f^n z) < 2\delta$$

for all $n \in \mathbf{Z}$. But

$$|Tf^n(Z)| \to \infty$$

either as $n \to -\infty$ or $n \to +\infty$, which contradicts $d_M(f^n y, f^n z) < 2\delta$ for all n, provided δ is small enough. This proves (i). The proofs of cases (ii) and (iii) are similar.

To prove (b), suppose $(i,V) = \mathcal{W}^u$. Let $\gamma: [0,1] \to M$, $\gamma(t) = x_t$ be a C^1 path tangent to $\mathcal{W}^u$. Let ρ^s be a plaque of $\mathcal{W}^s$ at x_0. Let $Q_t^{uu} \subset \mathcal{W}_{x_t}^{uu}$ be a plaque at x_t for $\mathcal{W}^{uu}$, belonging to a plaquation of $\mathcal{W}^{uu}$. For sufficiently small t, there is a unique point

$$y_t = Q_t^{uu} \cap \rho^s .$$

Thus we obtain a C^1 path $\{y_t\}$ in ρ^s, with $y_0 = x_0$. It is easy to see that this path is everywhere tangent to L. Therefore it lies in the leaf of L through x_0. But this implies that x_t lies in the leaf of $\mathcal{W}^u$ through x_0. This proves (b); and (c) is trivial.

Condition (a)(i) of (7.5) arises if V is an orbit of a locally free action of an abelian Lie group G on M, and $f \in G$.

An immediate consequence of (7.5) is:

(7.6) *THEOREM. Let* f *be a* C^1 *diffeomorphism which is* 1-*normally hyperbolic to a* C^1 *foliation* F. *Then* $\mathcal{W}^u$ *and* $\mathcal{W}^s$ *are unbranched* C^1-*laminations, they have unique path lifting, and each leaf of* $\mathcal{W}^u$ *or* $\mathcal{W}^s$ *is a union of leaves of* F.

Remark. We are unable to prove the following natural conjecture: if f is 1-normally hyperbolic to a C^1 lamination L, and L has unique path lifting, then $\mathcal{W}^u$ and $\mathcal{W}^s$ have unique path lifting.

Here is an example of J. Sotomayor (communicated to us by S. Newhouse and J. Palis) of a branched lamination which admits a normally hyperbolic diffeomorphism. Other interesting features of the example are discussed below.

Consider the flow in R^3 generated by the vector field

$$\dot{x} = x^2 \qquad \dot{y} = y \qquad \dot{z} = -z \quad .$$

Then 0 is the only fixed point, and it is non-generic; points of the z axis are sharply attracted toward 0; points of the y axis are sharply repelled from 0; points of the negative x axis are weakly attracted toward 0; and points of the positive x axis are weakly repelled from 0. Also, the foliations by lines parallel to the y axis and z axis (and also the x axis) are invariant. The basin of attraction of 0 is the $(x \leq 0, z)$-half-plane and the basin of repulsion is the $(x > 0, y)$-half-plane. See the figure below.

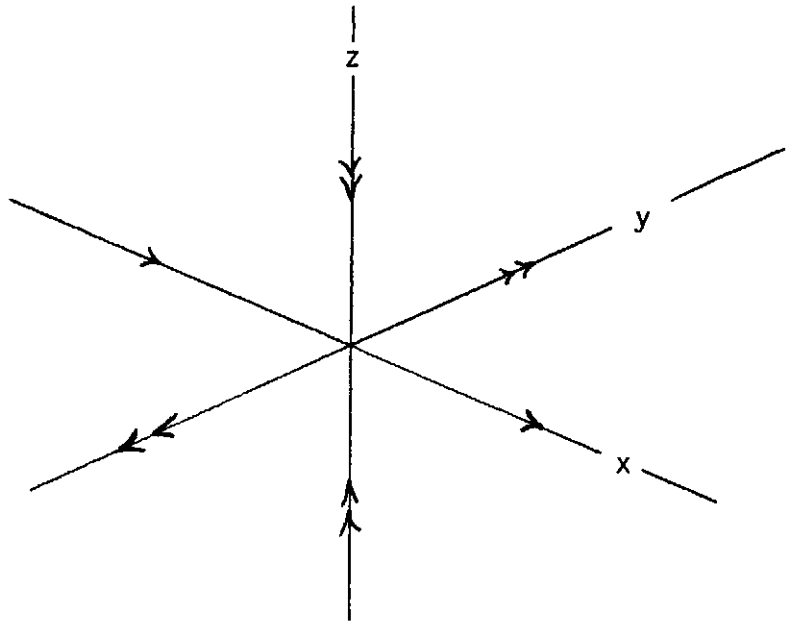

This flow is restricted to a neighborhood of 0 and is then extended to R^3 as follows. Two trajectories in the $(x > 0, y)$-half-plane are connected to two trajectories in the $(x < 0, z)$-half-plane. This is done by making the basin of attraction of 0 transversally intersect the basin of repulsion of 0 along the two trajectories. See the figure below.

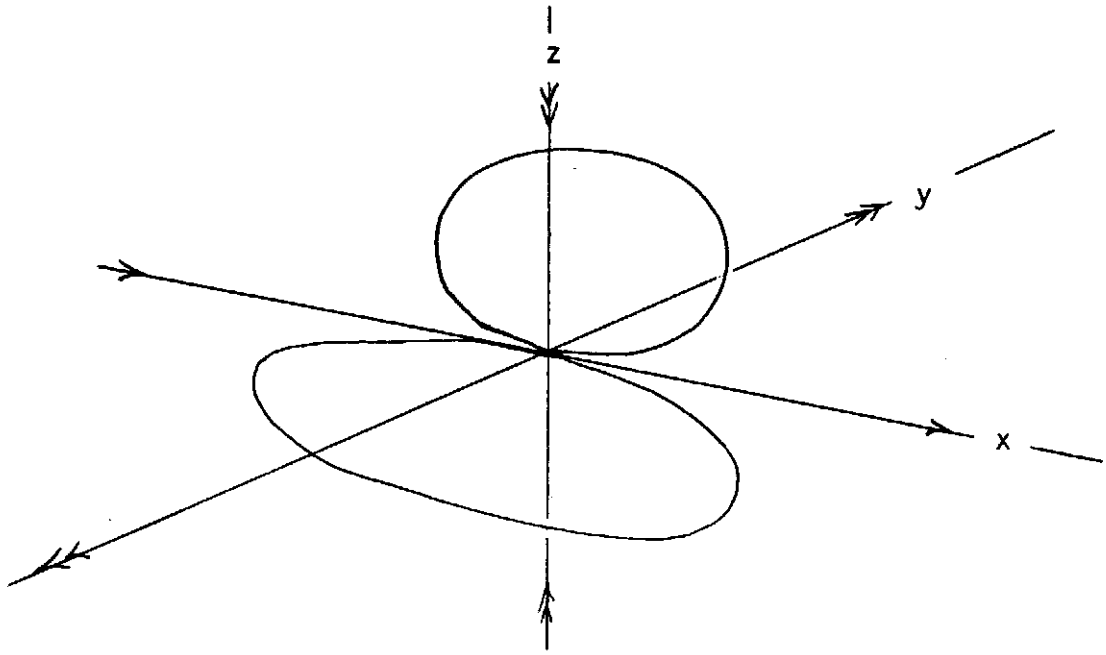

This produces a non-planar figure eight, Λ, consisting of γ_1, γ_2, and 0. If the construction is done carefully, the flow ϕ will leave invariant foliations extending the sets of segments parallel to the y and z axes near 0. Thus it will be clear that $T_\Lambda R^3 = N^u \oplus \bar{T} \oplus N^s$ $T\phi$-invariantly where $\bar{T}$ is the obvious line field equal to span $\dot{\phi}(p)$, $p \in \Lambda - 0$, and equal to the x axis at $p = 0$; N^u_p = the y-direction for p near 0; and N^s_p = the z-direction for p near 0. It is easy to see that this splitting exhibits the normal hyperbolicity of ϕ to Λ.

There is a leaf immersion $i: S^1 \to R^3$, with $i(S^1) = \Lambda$, to which ϕ is normally hyperbolic. By (6.1), any flow ϕ' near ϕ has a canonical invariant leaf immersion $i': S^1 \to R^3$. From the forms of the vector field generating ϕ, it is possible to find ϕ' near ϕ such that ϕ' has no fixed point near Λ. (0 was a saddle node, and such fixed points can be made to vanish.) Thus, $i'(S^1)$ is injectively immersed.

Indeed there are many leaf immersions into Λ. If $s = \{s_n\}$ is any bi-infinite sequence of 1's and 2's then there is a leaf immersion $i_s: \mathbb{R} \to \Lambda$ such that $i_s([n,n+1]) = \gamma_{s_n} \cup 0$. Up to reparameterization of $\mathbb{R}$ these are the only leaf immersions of $\mathbb{R}$ into Λ. If the bi-infinite sequence $s = \{s_n\}$ is periodic, then (and only then) the leaf immersion i_s factors through a leaf immersion of S^1 into Λ.

$$\begin{tikzcd} \mathbb{R} \arrow[r, "i_s"] \arrow[d, "\pi"] & \Lambda \\ S^1 \arrow[ur] & \end{tikzcd}$$

where $\pi: \mathbb{R} \to S^1$ is the covering map $\pi(t) = e^{2\pi i t/m}$, m being the period of s. The figure eight immersion corresponds to the sequence $\{\ldots 121212 \ldots\}$.

Returning to a perturbation ϕ' of ϕ which has no fixed points near Λ, we see that to each i_s there corresponds canonical $i'_s: \mathbb{R} \to \mathbb{R}^3$, invariant by ϕ'. It is not hard to see that $\{i'_s\}$ forms an unbranched lamination of a compact subset Λ' near Λ. This shows how a branched lamination can sometimes be perturbed into an unbranched lamination.

For Sotomayor it was important to know that Λ' is the only invariant set near Λ. This follows from the results of §7A, see especially the remark after the proof of (7A.1).

§7A. Local Product Structure and Local Stability. In this appendix, we generalize some results of [24] to laminations of dimension ≥ 2, using crucially an idea of Rufus Bowen [10]. Throughout, we assume f is a diffeomorphism of M, normally hyperbolic to the lamination L of Λ. By W^u_ε or $W^u_\varepsilon\Lambda$ we mean $\cup_{p\in\Lambda} W^{uu}_\varepsilon(p)$; by W^s_ε or $W^s_\varepsilon\Lambda$ we mean $\cup_{p\in\Lambda} W^{ss}_\varepsilon(p)$.

Definition. L is *subordinate* to ω^u if and only if each $W^u(L_p)$ meets each L_q in a relatively open subset of L_q for $p, q \in \Lambda$. Similarly ω^s.

Definition. (f,Λ) has *ε-local product structure* if and only if $W^u_\varepsilon\Lambda \cap W^s_\varepsilon\Lambda = \Lambda$.

Definition. (f,L) has *ε-local product structure* if and only if (f,Λ) has ε-local product structure and L is subordinate to ω^u, ω^s.

Remark. A cleaner looking assumption would be that laminae of ω^u, ω^s meet along laminae of L. This is unnecessarily strong.

Definition. Λ is *locally maximal* if it has a neighborhood in which it is the largest f-invariant set.

Clearly if (f,L) is normally hyperbolic and Λ is locally maximal then (f,Λ) has local product structure. The following theorem is a sort of converse to this.

(7A.1) *THEOREM. If* (f,L) *has local product structure and* $h_{f'}: \Lambda \to M$ *is the canonical candidate for a leaf conjugacy (see page 117),* f' *near* f, *then* $\Lambda' = h_{f'}\Lambda$ *is "uniformly locally* f'*-maximal"; that is,* Λ *and* f *have neighborhoods* U *and* $\mathcal{U}$ *such that* Λ' *contains all* f'*-invariant subsets of* U, $f' \in \mathcal{U}$.

Remark 1. A consequence of (7A.1) is that Axiom A group actions are locally Ω-stable. See [43].

Remark 2. Uniform local maximality of Λ' can be strengthened to: any point $x \in U$ with some forward δ-pseudo orbit for f' wholly in U belongs to $W^s_\varepsilon\Lambda'$. Likewise for reverse δ-pseudo orbits. δ is a positive constant depending only on U, $\mathcal{U}$. The proof is the same.

Remark 3. The proof we give of (7A.1) relies on (7A.2) which generalizes [10], not [24]; [10] is much more elegant than [24] in that no "semi-invariant-disc-families" are required. On the other hand, a proof of (7A.1) using the methods of [24] *can* be given and might extend, by methods of R.C. Robinson [46], to give structural stability of L in the neighborhood of Λ -- maybe even structural stability for group actions satisfying Axioms A and Strong Transversality.

Remark 4. We think that (7A.1) remains true when local product structure on (f,L) is replaced by local product structure on (f,Λ) and plaque expansiveness. When $f' = f$ we proved (7A.1) under this assumption, via methods of [24]. For f' near f, the proof "by uniformities" as in [24] probably works, but to check this seems formidable. For instance, the construction of all the machinery in §6 centered at f must also be done at f' near f; then it must be proved that f is a "small enough" perturbation of f'.

The following was proved by Rufus Bowen [10] for flow-foliations. (7A.1) is an easy consequence.

(7A.2) *SHADOWING LEMMA. If* (f,L) *has local product structure and* $\nu > 0$ *is given, then there exists* $\delta > 0$ *such that any* δ*-pseudo orbit for* f *in* Λ *can be* ν*-shadowed by a pseudo orbit for* f *in* Λ *which respects* L. *The same holds for truncated* δ*-pseudo orbits.*

Remark. When L is the lamination by points, this says: any δ-pseudo orbit of f in Λ can be ν-shadowed by a true f orbit. This greatly simplifies the proof of the main result of [24].

Proof of (7A.2). It suffices to prove (7A.2) for a high iterate of f. For if $f^K = g$, if $\{x_n\}$ is a δ-pseudo orbit for f, and if δ is very small then $\{\ldots,x_{-K},x_0,x_K,x_{2K},\ldots\}$ will be μ-shadowed by a g-pseudo orbit $\{\ldots,y_{-K},y_0,y_K,y_{2K},\ldots\}$ which respect L and μ can be arbitrarily small. Then

$$\{\ldots y_{-K},fy_{-K},\ldots,f^{K-1}y_{-K},y_0,fy_0,\ldots,f^{K-1}y_0,y_1,\ldots\}$$

is an f-pseudo orbit which respects L and, since Λ is compact and K is fixed, it shadows $\{x_n\}$ arbitrarily well.

Thus it is no loss of generality to assume

$$\sup\left\{\frac{d(fz,fz')}{d(z,z')}: z,z' \in W^{ss}_{\varepsilon}(p),\ p \in \Lambda\right\} \le \frac{1}{4}$$
$$\inf\left\{\frac{d(fz,fz')}{d(z,z')}: z,z' \in W^{uu}_{\varepsilon}(p),\ p \in \Lambda\right\} \ge 4$$

where $\varepsilon > 0$ is sufficiently small. We may also assume ε chosen so (f,L) has 2ε-local product structure and so

$$(1)\qquad \begin{matrix} d(x,y) \le \varepsilon \\ x,\ y \in \Lambda \end{matrix} \quad \Longrightarrow \quad \begin{matrix} W^{u}_{2\varepsilon}(y) \pitchfork W^{ss}_{2\varepsilon}(x) \ne \emptyset \\ W^{uu}_{2\varepsilon}(y) \pitchfork W^{s}_{2\varepsilon}(x) \ne \emptyset \end{matrix} .$$

Choose $\delta \le \min(\nu/20,\varepsilon/20)$.

Let $x_0,\ldots,x_N$ be a truncated δ-pseudo orbit. We modify it inductively. Set

$$(2)\qquad \begin{aligned} y_0 &= x_0 \\ y_k &= W^{u}_{\varepsilon}(fy_{k-1}) \pitchfork W^{ss}_{\varepsilon}(x_k) \qquad 1 \le k \le N . \end{aligned}$$

We claim that y_k is well defined and

$$(3)\qquad y_k \in W^{ss}_{2\delta(1+\frac{1}{2}+\cdots+(\frac{1}{2})^{k-1})}(x_k) .$$

This is true for $k = 0, 1$. Suppose it is true for some $k \ge 1$. Then

$$\begin{aligned} d(fy_k,x_{k+1}) &\le d(fy_k,fx_k) + d(fx_k,x_{k+1}) \le \frac{1}{4}\, d(y_k,x_k) + \delta \\ &\le \frac{1}{4}\, 2\delta\left(1+\frac{1}{2}+\cdots+(\frac{1}{2})^{k-1}\right) + \delta = \delta\left(1+\frac{1}{2}+\cdots+(\frac{1}{2})^{k}\right) \end{aligned}$$

and so, by (1), y_{k+1} is well defined by (2) and satisfies (3). This completes the induction and shows that

$$\{y_n\} \text{ is a } 4\delta\text{-pseudo orbit which respects } \mathcal{W}^u_\varepsilon \text{ and } 4\delta\text{-shadows } \{x_n\} .$$

Moreover, if $\{x_n\}$ respects $\mathcal{W}^s_\varepsilon$ then $\{y_n\}$ respects $L = \mathcal{W}^u_\varepsilon \cap \mathcal{W}^s_\varepsilon$.

Applying exactly the same construction to the truncated 4δ-pseudo orbit for f^{-1}, $y_N,\ldots,y_0$, we get a pseudo orbit $z_N,\ldots,z_0$ for f^{-1} which respects $\mathcal{W}^s_\varepsilon(f^{-1}) = \mathcal{W}^u_\varepsilon(f)$ and 16δ-shadows $y_N,\ldots,y_0$. Thus, $z_0,\ldots,z_N$ is a pseudo orbit for f which ν-shadows $x_0,\ldots,x_N$ and respects L. This completes the proof of the shadowing lemma (7A.2) for doubly truncated pseudo orbits.

Let $\{x_n\}_{n\in\mathbb{Z}}$ be a full δ-pseudo orbit for f. By the preceding construction, there exists, for each $N > 0$, a pseudo orbit $z^N_{-N},\ldots,z^N_{N-1},z^N_N$ for f which respects L and ν-shadows the N-truncation $x_{-N},\ldots,x_{N-1},x_N$. Since Λ is compact, a diagonal process produces a sequence $N_k \to \infty$ such that

$$z^{N_k}_n \xrightarrow[k]{} z_n \qquad n \in \mathbb{Z} .$$

and it is clear that $\{z_n\}$ is a pseudo orbit for f which respects L and ν-shadows $\{x_n\}$. This completes the proof of the shadowing lemma.

Remark. When the lamination L is a C^1 foliation, as in [10], the $\{z^N_n\}$ considered above converge uniformly to $\{z_n\}$ without choosing subsequences.

Proof of (7A.1). Let $h_{f'}: \Lambda \to M$ be the canonical candidate for a leaf conjugacy defined in §7 for all $f' \in \mathcal{U}_0$, some neighborhood of f in $\mathrm{Diff}^1(M)$. Let $\mathcal{U}$ be a smaller neighborhood of f and U a small neighborhood of Λ in M. Suppose some f'-orbit $\{x_n\}$ is wholly in U, $f' \in \mathcal{U}$. Then $\{x_n\}$ can be μ-shadowed by an f-pseudo orbit $\{q_n\}$ in Λ, and μ is small when U and $\mathcal{U}$ are small. By (7A.2), $\{q_n\}$ can be ν-shadowed by an f-pseudo orbit, $\{p_n\}$, which respects L, and ν is small when μ is small. Hence $\{x_n\}$ can be closely shadowed by an f-pseudo orbit $\{p_n\}$ which respects L. From the characterization of $h_{f'}$ in §7, we deduce that

$$x_0 = h_{f'}(p)$$

where p is the point in the same L-plaque as p_0 such that $x_0 \in \exp_p \eta(\varepsilon)$. Hence $x_0 \in \Lambda' = h_{f'}\Lambda$ and (7A.1) is proved.

Remark. If $i: V \to M$ is a leaf immersion with $i(V) = \Lambda$, if L is the resulting, possibly branched lamination of Λ, and if (f,L) has local product structure then the proof of (7A.1) adapts easily to show that Λ' is uniformly locally maximal where $\Lambda' = i'V$, i' being the canonical f'-invariant leaf immersion near i.

§8. Equivariant Fibrations and Nonwandering Sets. In this section, we apply §7 to prove a result in differentiable dynamical systems.

(8.1) *THEOREM. There is a non-empty open subset of* $\mathrm{Diff}^r(T^4)$, $1 \leq r \leq \infty$, *consisting of diffeomorphisms which are topologically* Ω*-stable but not* Ω*-stable.* (T^4 *is the* 4*-torus.*)

The proof of (8.1) occurs after (8.6). Throughout §8, M is a compact, smooth, boundaryless manifold.

The *nonwandering set* of the diffeomorphism f of M is

$$\Omega_f = \{p \in M\text{: for each neighborhood } U \text{ of } p,\ (f^n U) \cap U \neq \emptyset \text{ for some } n \neq \emptyset\} .$$

f is *topologically* Ω*-stable* if and only if Ω_f is homeomorphic to Ω_g for all g near f in $\mathrm{Diff}^1(M)$; f is Ω*-stable* if and only if it is topologically Ω-stable and the homeomorphism $h: \Omega_f \to \Omega_g$ can be chosen to be a conjugacy, $gh = hf$, on Ω_f. The homeomorphism h is usually required to be C^0 near the inclusion although it is not known whether this is really any restriction.

Questions. Is topological Ω-stability generic? i.e. does the set of topologically Ω-stable diffeomorphisms contain a residual (or open dense?) subset of $\mathrm{Diff}^r(M)$? What can be said about (8.1) when S^2 replaces T^4?

The example establishing (8.1) is constructed on T^4 as a twisted product of an Anosov and a derived-from-Anosov (DA) diffeomorphism. The latter is defined by Smale in [48]. This is similar to the Abraham-Smale counterexample which shows Ω-stability is not generic [2]. We show that $\Omega_f = T^4$ and that this equality persists when f is perturbed. (Hence f, and all g near f, are topologically Ω-stable.). To do so requires the structural stability of a certain equivariant lamination whose laminae are 2-tori, and for this we use §7.

Definition. Let Λ be a compact subset of M and let X be a compact Hausdorff space. A surjection $\pi: \Lambda \to X$ is a C^r-*regular fibration* if and only if it is a locally trivial fibration and its fibers form a C^r lamination of Λ.

If $\pi: \Lambda \to X$ is a C^r regular fibration then X is the quotient space of Λ by the fibers. Since X is Hausdorff, π is continuous, and Λ is compact, it follows that the fibers of π are compact. Thus, a C^r-regular fibration amounts to a C^r lamination of Λ with compact laminae, locally trivially assembled.

Remark. In the proof of (8.1), X is the 2-torus, Λ is the 4-torus, and π is the product projection $T^4 = T^2 \times T^2 \to T^2$ onto the first factor.

Definition. The C^r-regular fibration $\pi: \Lambda \to X$ is f-*equivariant* if and only if $f: M \to M$ permutes the π-fibers.

(8.2) *PROPOSITION. If* $\pi: \Lambda \to X$ *is* f-*equivariant and* f *is normally hyperbolic to the* π-*fibers then* f *is fiber expansive, i.e.* $f/\pi: X \to X$ *is expansive.*

Proof. f/π means the action of f on the π-fibers, i.e. on the quotient space X. Let V be the (perhaps nonseparable) smooth manifold which is the disjoint union of the π-fibers. Let $i: V \to M$ be the inclusion. As in §§6,7, i is a leaf immersion to which f is normally hyperbolic. Let η be a smooth normal bundle to i and let i^*f be the pull-back of f to $i^*\eta(\varepsilon)$, the formal ε-tubular neighborhood of V. By (6.1), the zero section of $i^*\eta(\varepsilon)$ is the maximal i^*f-invariant set.

Let $\eta_x(\varepsilon)$ be $i^*\eta(\varepsilon)$ restricted to $\pi^{-1}(x)$ and let $i_x: \eta_x(\varepsilon) \xrightarrow{i^*} TM \xrightarrow{\exp} M$ be the tubular neighborhood of $\pi^{-1}(x)$ in M. Suppose f is not fiber-expansive. Then, for some distinct $x, x' \in X$, $f^n(\pi^{-1}(x'))$ has points very near $f^n(\pi^{-1}(x))$ for all $n \in \mathbb{Z}$. Since Λ is compact and π is locally trivial this implies

$$f^n(\pi^{-1}(x')) \subset i_{x_n}(\eta_{x_n}(\varepsilon)) \qquad x_n = (f^n/\pi)(x)$$

for all $n \in \mathbb{Z}$. The set $\bigcup_{n\in\mathbb{Z}} i_{x_n}^{-1}(f^n(\pi^{-1}(x'))) \subset \eta(\varepsilon)$ is i^*f-invariant but does lie in the zero section of $i^*\eta$, contradicting the local maximality referred to above. This completes the proof of (8.2).

(8.3) *COROLLARY. Such a* $\pi: \Lambda \to X$ *is stable under perturbations of* f.

Proof. (8.2) verifies the hypothesis of (7.4); (8.3) is its conclusion.

Remark 1. (8.3) says that perturbations f' of f canonically produce new C^r-regular fibrations $\pi': \Lambda' \to X'$ which are "fibration-conjugate" to $\pi: \Lambda \to X$. That is, the leaf conjugacy $h_{f'} = h: \Lambda \to \Lambda'$ makes the diagram

$$\begin{tikzcd}
\Lambda' \arrow[rr, "f'"] \arrow[dd, "\pi'"'] & & \Lambda' \arrow[dd, "\pi'"] \\
& \Lambda \arrow[ul, "h"'] \arrow[r, "f"] \arrow[d, "\pi"] & \Lambda \arrow[ur, "h"] \arrow[d, "\pi"] \\
& X \arrow[r, "f/\pi"] \arrow[dl, "h/\pi"] & X \arrow[dr, "h/\pi"] \\
X' \arrow[rr, "f'/\pi'"] & & X'
\end{tikzcd}$$

commute. If convenient, we may identify X and X' by the homeomorphism h/π. This makes f, f' equivariant fibrations over the same base map.

Remark 2. There is an alternate proof of the existence of the map $h_{f'}$ in (7.1,4) which is more in the spirit of [22] in that it "reduces" global questions in the manifold M to local questions in a Banach manifold. Since the leaf space Λ/L of a general lamination is non-Hausdorff, the construction we are about to present is most natural for a C^r-regular fibration $\pi: \Lambda \to X$. As in (8.2) suppose π is f-equivariant and f is r-normally hyperbolic to the π-fibers. Since Λ is compact, all maps $X \to \Lambda$ are bounded. Let $\mathcal{M}$ and Σ be respectively the set of all maps $X \to \Lambda$ and all sections $X \to \Lambda$. Both $\mathcal{M}$ and Σ are Banach manifolds, even if X is non-Hausdorff. The map f acts naturally on $\mathcal{M}$ by

$$g \mapsto f_{\#}(g) = f \circ g \circ (f/\pi)^{-1} .$$

Then $f_{\#}$ is a diffeomorphism and Σ is f-invariant. Since f is r-normally hyperbolic to π, $f_{\#}$ is r-normally hyperbolic at Σ. Now (6.1) extends to Banach manifolds, assuming all the uniformities and [existence of] normal bundles which come from the finite dimensional situation. If f' is C^1 near f then $f'_{\#}$ will have an invariant manifold $\Sigma' \subset \mathcal{M}$ near Σ. The f'-invariant fibration can then be found as

$$\pi'^{-1}(x) = \{\sigma(x) : \sigma \in \Sigma'\} \qquad x \in X .$$

Note that we identify X and X' here, because it is easier to describe the π'-fibers that way. Also, to show that these π'-fibers fit together well requires much of the analysis of §7, except when X is Hausdorff. That is why we postponed until now this Banach-manifold approach to laminations.

The next result is the form of the Cloud Lemma [48] we require for (8.1). A homeomorphism f of Λ is *topologically transitive* if and only if there is a dense f-orbit in Λ, or equivalently, if and only if the f-orbit of each non-empty, Λ-open set is dense in Λ.

(8.4) *PROPOSITION. If* f *is normally hyperbolic to the lamination* L *of* Λ *and if* $f|\Lambda$ *is topologically transitive then:*

(a) *If* U *is an open set of* M *and* U *meets* $W^s\Lambda$ *then the forward* f*-orbit of* U *(or of any* f*-iterate of* U*) contains all of* $\overline{W^u\Lambda}$ *in its closure:*

$$\overline{W^u\Lambda} \subset \overline{\bigcup_{n\geq m} f^n U} \qquad \textit{for all} \qquad m \in \mathbb{Z}$$

(b) $\overline{W^u\Lambda} \cap \overline{W^s\Lambda} \subset \Omega_f$.

Proof. By $W^u\Lambda$, we mean $\bigcup_{x\in\Lambda} W^{uu}(x)$, etc. Choose $p \in \Lambda$ so that $\{f^n p\}_{n\geq k}$ is dense for all $k \in \mathbb{Z}$. Replacing p by an iterate, $f^k p$, we can assume U meets $W^{ss}(p)$. For $W^{ss}(x)$ depends continuously on $x \in \Lambda$. Fix an m and a $\delta > 0$. Let $M_\delta(\ )$ denote the δ-neighborhood in M. By the λ-lemma [35],

$$W^{uu}_\varepsilon(f^n p) \subset M_\delta(f^n U)$$

for all sufficiently large n. This says $f^n U$ nearly engulfs $W^{uu}_\varepsilon(f^n p)$. Since $\{f^n p\}_{n\geq k}$ is dense in Λ, we get

$$\overline{W^u_\varepsilon\Lambda} \subset M_{2\delta}\Big(\bigcup_{n\geq m} f^n U\Big) \quad .$$

Since $\delta > 0$ is arbitrary and m is fixed,

$$\overline{W^u_\varepsilon\Lambda} \subset \overline{\bigcup_{n\geq m} f^n U} \ .$$

Since $\bigcup_{n\geq m} f^n U$ is carried into itself by positive iterates of f, and since $W^u\Lambda = \bigcup_{k\geq 0} f^k(W^u_\varepsilon)$, forward f-iteration gives (a).

The proof of (b) is very similar to the proof of the usual Cloud Lemma [48]. Let $z \in \overline{W^u\Lambda} \cap \overline{W^s\Lambda}$ and let U be a given neighborhood of z in M. Choose $x, y \in \Lambda$ so that U meets $W^{uu}_\varepsilon(x)$ and $W^{ss}_\varepsilon(y)$. Here ε is large. By topological transitivity of $f|\Lambda$, there exists a point $p \in \Lambda$ such that $\{f^n p\}_{n \geq k}$ is dense in Λ for all $k \in \mathbf{Z}$. We can assume p is so near y that U also meets $W^{ss}_\varepsilon(p)$. Then, as in the proof of (a), $f^n U$ nearly engulfs all of $W^{uu}_\varepsilon(p)$ for large n and fixed ε. For some large values of n, $f^n p$ is very near x. Also, $W^{uu}_\varepsilon(f^n p)$ is nearly equal to $W^{uu}_\varepsilon(x)$. Hence U meets $W^{uu}_\varepsilon(f^n p)$, n large, and since $f^n U$ nearly engulfs $W^{uu}_\varepsilon(f^n p)$, $f^n U$ also meets U, n large. Hence $z \in \Omega_f$. This completes the proof of (8.4).

(8.5) *COROLLARY. If* f *is normally hyperbolic to a lamination of* Λ, *if* $f|\Lambda$ *is topologically transitive, and if* $W^u\Lambda = M = W^s\Lambda$, *then* f *is topologically transitive on the whole manifold* M.

Proof. Part (a) shows the f-orbit of any non-empty open subset of M to be dense.

Remark. No use was made of TL being integrable in the above proofs. Thus, (8.4,5) remain valid for any compact f-invariant set Λ if: Tf leaves invariant a splitting $E^u \oplus E^c \oplus E^s$, Tf is ρ-pseudo hyperbolic respecting $E^u \oplus (E^c \oplus E^s)$, Tf^{-1} is ρ-pseudo hyperbolic respecting $E^s \oplus (E^u \oplus E^c)$, and $\rho > 1$. For then §5 provides the necessary strong manifold theory.

The following consequence of (8.5) is a kind of propagation theorem.

(8.6) *PROPOSITION. Let* f *be normally hyperbolic at the* C^r*-regular,* f*-equivariant fibration* $\pi: M \to N$ *where* M, N *are compact smooth manifolds. Suppose* $f|\pi$ *is an Anosov diffeomorphism of* N *having a fixed point* p *and* $\Omega_{f|\pi} = N$. *If* f *is topologically transitive on the single invariant fiber* $\pi^{-1}(p)$ *then* f *is topologically transitive on the whole manifold* M.

Remarks. It is an open question whether every Anosov diffeomorphism of N has a fixed point and has $\Omega = N$. Normal hyperbolicity of f to π is only required at $\pi^{-1}(p)$; elsewhere, f-equivariance of π suffices.

Proof of (8.6). By the asymptotic characterization of the stable and unstable manifolds it is clear that

$$W^u(\pi^{-1}x) = \pi^{-1}(W^u x) \qquad W^s(\pi^{-1}x) = \pi^{-1}(W^s x)$$

for all $x \in N$. An Anosov diffeomorphism with $\Omega = N$ has $\overline{W^u(x)} = \overline{W^s(x)} = N$ for all $x \in N$ [3]. Hence $\overline{W^u(\pi^{-1}p)} = \overline{W^s(\pi^{-1}p)} = M$ and (8.5) applies.

Bifurcation Theory studies the generic properties of differentiable maps $\phi: X \to \mathrm{Diff}(Y)$ where X and Y are differentiable manifolds. Given such a ϕ and a diffeomorphism $g: X \to X$, there is a natural twisted product $f(x,y) = (gx,\phi(x)y)$

$$\begin{tikzcd} X \times Y \arrow[r, "f"] \arrow[d, "\pi"] & X \times Y \arrow[d, "\pi"] \\ X \arrow[r, "g"] & X \end{tikzcd} \qquad f = g \hat{\times} \phi$$

We denote f by $g \hat{\times} \phi$. Note that π is the trivial fibration and is f-equivariant If f is normally hyperbolic at π and f' is C^1 near f then (8.3) says there is a canonical f'-equivariant fibration π' near f. This gives a new bifurcation $\phi': X \to \mathrm{Diff}(Y)$; ϕ' need only be C^0 close to ϕ.

Proof of (8.1). Let g be an Anosov diffeomorphism of T^2, the 2-torus, having two fixed points, p and q. Let $\phi: T^2 \to \mathrm{Diff}(T^2)$ be a smooth bifurcation such that (as in [2])

$\phi(p)$ is an Anosov diffeomorphism of T^2

$\phi(q)$ is the DA-diffeomorphism of T^2 described in [48] .

Replacing g by a high iterate, if necessary, we may and do assume $f = g \hat{\times} \phi$ is normally hyperbolic to the π-fibration. By (8.6), f is topologically transitive on the whole manifold $M = T^4$. Hence $\Omega_f = T^4$. If f' is C^1 near f then, by (8.3) and especially Remark 1 after its proof, there is a $\pi': T^4 \to T^2$

$$\begin{tikzcd} T^4 \arrow[r, "f'"] \arrow[d, "\pi'"] & T^4 \arrow[d, "\pi'"] \\ T^2 \arrow[r, "g"] & T^2 \end{tikzcd}$$

such that π' is a C^r-regular f'-equivariant fibration. Since $\pi'^{-1}(p)$ is f'-invariant and is C^1 near $\pi^{-1}(p)$, and since f' is C^1 near f, it follows that $f'|\pi'^{-1}(p)$ is an Anosov diffeomorphism of the fiber $\pi'^{-1}(p)$, because the set of Anosov diffeomorphisms is open. Hence f' is topologically transitive on $\pi'^{-1}(p)$, since all Anosov diffeomorphisms of T^2 are topologically transitive [3].

By (8.6), f' is topologically transitive on the whole manifold $M = T^4$. Therefore $\Omega_{f'} = T^4$ and f is topologically Ω-stable.

On the other hand, no C^1 approximation f' to f is Ω-stable. This is proved in [2] when S^2 replaces the base torus and a horse-shoe diffeomorphism replaces g. In our case, the proof is entirely similar, but we include it for completeness. Let f' be C^1 near f and let π' be the canonical f'-equivariant fibration near π. The fibers $\pi'^{-1}(p)$, $\pi'^{-1}(q)$ are f'-invariant and f' on each π'-fiber is C^1 near f on the corresponding π-fiber. The DA has, on $\pi^{-1}(q)$, a source -- that is, a fixed point whose unstable manifold includes a neighborhood of g in $\pi^{-1}(q)$. Such a source persists for the small change of f to f'. (In fact the DA is structurally stable [45].) Let y' be this source for $f'|\pi'^{-1}(q)$. Consider the strong stable manifold of y. It equals the stable manifold of y, has dimension 1 and projects by π onto the stable manifold of q in T^2, $W^s(q)$. In T^2, $W^s(q)$ transversely intersects $W^u(p)$. Hence $W^s(y';f')$ intersects $W^u(\pi'^{-1}(p))$ in a persistent manner: no slight change of f' to f'' destroys the intersection $W^s(y'',f'') \cap W^u(\pi''^{-1}(p))$. (Since π'' is not smooth, we do not assert differentiable transversality.) However, it is easy to perturb f' to two non conjugate maps f''_1 and f''_2 as in [2]:

1° $W^s(y'',f''_1)$ meets $W^u(x'',f''_1)$ for no f''_1-periodic point $x'' \in \pi''^{-1}_1(p)$

2° $W^s(y'',f''_2)$ does meet the unstable manifold of at least one f''_2-periodic point $x'' \in \pi''^{-1}_2(p)$.

Hence f' can't be conjugate to all f'' near f'. This completes the proof of (8.1).

The propagation result, (8.6), is interesting in its own right. It generalizes to subsets as follows.

(8.7) *PROPOSITION. Let* π *be an* f*-equivariant fibration of* Λ *where* X *is a hyperbolic subset for* $g: N \to N$:

$$\begin{array}{ccccc} \Lambda & \hookrightarrow & M & \xrightarrow{f} & M \\ \downarrow{\scriptstyle\pi} & & & & \\ X & \hookrightarrow & N & \xrightarrow{g} & N \end{array}$$

Suppose g *has a fixed point* p *in* X *such that* $W^s p$ *and* $W^u p$ *are dense in* X. *If* $f|\pi^{-1}(p)$ *is topologically transitive then* $\Lambda \subset \Omega_f$. *Moreover if* Λ *has a form of "global product structure at* $\pi^{-1}(p)$*",*

$$W^u(\pi^{-1}(p)) \cap W^s(\pi^{-1}(p)) \subset \Lambda ,$$

then $f|\Lambda$ *is topologically transitive. If* f' *is a* C^1 *small perturbation of* f *then the same is true for* f', π', Λ' *where* π' *is the canonical perturbation of* π.

The proof, although nontrivial, is left to the reader. The above techniques enable us to construct a diffeomorphism f which is topologically Ω-stable, not Ω-stable, and has $\Omega_f \neq M$. Again, f is a twisted product $f = g \hat{\times} \phi$, but this time g is an Axiom A diffeomorphism of the base with no cycles and $\Omega_g \subsetneq$ base. In particular, if the hyperbolicity of g is sharp enough in the Abraham-Smale example [2] then $f = g \hat{\times} \phi: S^2 \times T^2 \circlearrowleft$ is such an f. (7A.1) and (8.7) verify that $\Omega_f = \pi^{-1}(\Omega_g)$ and that equality persists when f is perturbed.

We close this section with several questions.

Which manifolds admit diffeomorphisms f such that f and all its perturbations are topologically transitive? It is easy to imagine constructing such manifolds inductively, starting with two manifolds admitting Anosov diffeomorphisms and using (8.6). Are there any other examples?

If $A \in SL(n,\mathbb{Z})$ has no eigenvalue which is a root of unity then A induces an ergodic automorphism of the n-torus T^n, again denoted by $A: T^n \to T^n$. The tangent bundle of T^n splits as $E^u \oplus E^c \oplus E^s$ where E^u, E^c, E^s are the translates of the generalized eigenspaces of eigenvalues which are > 1, $= 1$, < 1 in absolute value. If $E^c = 0$ then A is Anosov. If $n = 4$ then E^u, E^c, E^s may all be nonzero. The splitting $E^u \oplus E^c \oplus E^s$ gives rise to six invariant laminations of T^n by the planes tangent to E^u, E^c, E^s, $E^u \oplus E^c$, $E^c \oplus E^s$, $E^u \oplus E^s$. The three which include E^c are normally hyperbolic and hence stable. The others are not normally hyperbolic. On the other hand, if f is C^1 near A then f has invariant foliations $\mathcal{W}^{uu}$, $\mathcal{W}^{ss}$ which are nearly tangent to E^u, E^s. We expect that f has no f-invariant $\mathcal{W}^{us}$-foliation. Is this true? What if the eigenvalues of A are rationally independent? This is a global Sternberg problem. Bill Parry has proved that A is ergodic if and only if each E^u-leaf (or equivalently each E^s-leaf) is dense in T^n [36]. Is the same true for f? Less extravagantly, are the $\mathcal{W}^{uu}$ and $\mathcal{W}^{ss}$ foliations homeomorphic to the E^u and E^s foliations? Suppose A is ergodic. Is f topologically transitive? If f preserves Lebesgue measure on

$\hat{T}^n$ is f ergodic? If $E^c = 0$ then all these questions have positive answers due to Anosov and Sinai [4].

M. Hirsch
Department of Mathematics
University of California
Berkeley, California

C. Pugh
Department of Mathematics
University of California
Berkeley, California

M. Shub
Department of Mathematics
Queens College
New York

REFERENCES

1. R. Abraham and J. Robbin, *Transversal Mappings and Flows*, Benjamin Inc., New York, 1967, pp. 120-131.

2. R. Abraham and S. Smale, Nongenericity of Axiom A and Ω-Stability, Global Analysis - Proc. Symp. in Pure Math., vol. 14, AMS, Providence, R.I., 1970.

3. D. Anosov, Geodesic Flows on Closed Riemann Manifolds with Negative Curvature, Proc. of the Stecklov Inst. of Math., No. 90 (1967). English translation, AMS, Providence, R.I., 1969.

4. D. Anosov and Ya. Sinai, Some Smooth Ergodic Systems, Upseki Mat. Nauk *22*, No. 5 (1967), 103-167. English translation, Russian Math. Surveys *22*.

5. V. Arnold and A. Avez, *Problèmes Ergodique de la Méchanique Classique*, Gauthier-Villars, Paris, 1967, pp. 7-8.

6. L. Auslander and R. MacKenzie, *Introduction to Differentiable Manifolds*, McGraw-Hill, New York, 1963, p. 184.

7. G.D. Birkhoff, *Dynamical Systems*, AMS, Providence, R.I., 1927.

8. N. Bogoliubov and Y. Mitropolsky, *Asymptotic Methods in the Theory of Nonlinear Oscillations*, Gordon and Breach, New York, 1961, Chapters 5, 6.

9. _____, The Methods of Integral Manifolds in Nonlinear Mechanics, Contributions to Differential Equations *2* (1963), 123-196.

10. R. Bowen, Periodic Orbits for Hyperbolic Flows, Amer. J. Math. *94* (1972), 1-37.

11. D. Chillingworth, unpublished.

12. J. Dieudonné, *Foundations of Modern Analysis*, Academic Press, New York, 1960, p. 157.

13. S. Diliberto, Perturbation Theorems for Periodic Surfaces I, II, Rend. Cir. Mat. Palermo *9*, *10* (1960-61), 265-299, 111-161.

14. N. Fenichel, Persistence and Smoothness of Invariant Manifolds of Flows, Indiana University Math. J. *21* (1971-72), 193-226.

15. A. Gottlieb, Converses to the Ω-Stability and Invariant Lamination Theorem, Trans. Amer. Math. Soc. *202* (1975), 369-383.

16. J. Hadamard, Sur l'itération et les solutions asymptotiques des équations différentielles, Bull. Soc. Math. France *29* (1901), 224-228.

17. J. Hale, Integral Manifolds of Perturbed Differential Systems, Ann. Math. *73* (1961), 496-531.

18. _____, On the Method of Krylov-Bogoliubov-Metropolsky for the Existence of Integral Manifolds, Bol. Soc. Mex. (1960).

19. _____, *Ordinary Differential Equations*, Interscience, New York, p. 121.

20. P. Hartman, *Ordinary Differential Equations*, John Wiley and Sons, New York, 1964.

21. M. Hirsch, Foliations and Noncompact Transformation Groups, Bull. AMS *76* (1970), 1020-1023.

22. M. Hirsch and C. Pugh, Stable Manifolds and Hyperbolic Sets, Proc. Symp. in Pure Math., vol. 14, AMS, Providence, R.I., 1970, pp. 133-164.

23. M. Hirsch, C. Pugh and M. Shub, Invariant Manifolds, Bull. AMS *76* (1970), 1015-1019.

24. M. Hirsch, J. Palis, C. Pugh and M. Shub, Neighborhoods of Hyperbolic Sets, Inv. Math. *9* (1970), 121-134.

25. R. Holmes, A Formula for the Spectral Radius of an Operator, Amer. Math. Monthly *75* (1968), 163-166.

26. M. Irwin, A Classification of Elementary Cycles, Topology *9* (1970), 35-48.

27. _____, On the Stable Manifold Theorem, Bull. London Math. Soc. *2* (1970), 196-198.

28. A. Kelley, The Stable, Center-Stable, Center, Center-Unstable, Unstable Manifolds. An appendix in *Transversal Mappings and Flows* by R. Abraham and J. Robbin, Benjamin, New York, 1967.

29. I. Kupka, Stabilité des variétés invariantes d'un champ de vecteurs pour les petites perturbations, C.R. Acad. Sc. Paris *258* (1964), 4197-4200.

30. W. Kyner, Invariant Manifolds, Rend. Cir. Mat. Palermo *10* (1961), 98-100.

31. S. Lang, *Introduction to Differentiable Manifolds*, Interscience Publishers, New York, 1962, p. 102.

32. R. Mañé, Persistent Manifolds are Normally Hyperbolic, Bull. Amer. Math. Soc. *80* (1974), 90-91.

33. J. Munkres, *Elementary Differential Topology*, Annals of Math. Studies, Princeton University Press, Princeton, N.J., 1963, pp. 37-42.

34. K. Nomizu, Lie Groups and Differential Geometry, Math. Soc. Japan, 1956.

35. J. Palis, On Morse Smale Dynamical Systems, Topology *8* (1969), 385-405.

36. W. Parry, Dynamical Systems on Nilmanifolds, Bull. London Math. Soc. *2* (1970), 37-40.

37. O. Perron, Über Stabilität und asymptotisches Verhalten der Integrale von Differentialgleichungssystemen, Math. Z. *29* (1928), 129-160.

38. _____, Über Stabilität und asymptotisches Verhalten der Lösungen eines Systems endlicher Differenzengleichungen, J. Reine Angew. Math. *161* (1929), 41-64.

39. _____, Die Stabilitätsfrage bei Differentialgleichungen, Math. Z. *32* (1930), 703-728.

40. C. Pugh, Invariant Manifolds, Actes, Congrès Intern. Math., 1970, Tome 2, 925-928.

41. C. Pugh and M. Shub, Linearization of Normally Hyperbolic Diffeomorphisms and Flows, Inv. Math. *10* (1970), 187-198.

42. _____, The Ω-Stability Theorem for Flows, Inv. Math. *11* (1970), 150-158.

43. _____, Axiom A Actions, Inventiones Math. *29* (1975), 7-38.

44. F. Riesz and B. Sz.-Nagy, *Functional Analysis*, Frederick Ungar, New York, 1955.

45. J. Robbin, A Structural Stability Theorem, Ann. of Math. *94* (1971), 447-493.

46. R.C. Robinson, Structured Stability, preprint, Northwestern University, Evanston, Ill.

47. R. Sacker, A Perturbation Theorem for Invariant Riemannian Manifolds, Proc. Symp. at Univ. of Puerto Rico, edited by J. Hale and J. LaSalle, Academic Press, 1967, pp. 43-54.

48. S. Smale, Differential Dynamical Systems, Bull. AMS *73* (1967), 747-817.

49. F. Takens, Partially Hyperbolic Fixed Points, Topology *10* (1971), 133-147.

50. R.F. Williams, One Dimensional Nonwandering Sets, Topology *6* (1967), 473-487.

Index

	Page
adapted Finsler	69
addable vectors	88
backward ρ-asymptotic	61
Banach bundle	8
branched lamination	111
C^r - regular fibration	137
C^r - uniform	85, 88
centrum	22
connector	11
equivariant fibration	137
fiber contraction	30, 31, 80
Finsler	8, 68, 69
flattening chart	91
foliation	115
forward ρ-asymptotic	61
graph transform	17, 25
Grassmannian	74
lamination	111, 115
leaf conjugacy	115
leaf immersion	68
linear graph transform	17
Lipschitz jet	26, 27
local product structure	132
locally maximal	132
Lyapunov stable, unstable	65
minimum norm	3
nonwandering set	136
normal hyperbolicity	3, 4, 69, 116
normally r-contractive	82

Add 4 to 6 to these page numbers
to arrive at the correct pdf page numbers

Page

overflowing 30

plaquation 72

plaque 62, 72

plaque-expansive 116

pre-foliation 61

pre-lamination 61

pseudo-hyperbolic 53

pseudo-orbit 116

self coherent 61

self tangent 68

shadowing 117, 133

sharpness 30

slope of a section 29

smoothable lamination 123

stable, strong stable, strong unstable
manifold 39, 60

structural stability 115

topological transitivity 139

topological Ω-stability 136

unbranched 111

unique path lifting 127

unstable manifold 39, 60

well branched 111

Ω-stability 136

Add 4 to 6 to these page numbers to arrive at the correct pdf page numbers

View publication stats